2020

CAMARO

Owner's Manual

chevrolet.com (U.S.)
chevrolet.ca (Canada)

Contents

Introduction 2
Keys, Doors, and Windows 7
Seats and Restraints 41
Storage 89
Instruments and Controls 91
Lighting 130
Infotainment System 137
Climate Controls 143
Driving and Operating 152
Vehicle Care 219
Service and Maintenance 304
Technical Data 319
Customer Information 324
Reporting Safety Defects 334
OnStar 338
Connected Services 346
Index 349

Introduction

The names, logos, emblems, slogans, vehicle model names, and vehicle body designs appearing in this manual including, but not limited to, GM, the GM logo, CHEVROLET, the CHEVROLET Emblem, CAMARO, and the CAMARO Emblem are trademarks and/or service marks of General Motors LLC, its subsidiaries, affiliates, or licensors.

For vehicles first sold in Canada, substitute the name “General Motors of Canada Company” for Chevrolet Motor Division wherever it appears in this manual.

This manual describes features that may or may not be on the vehicle because of optional equipment that was not purchased on the vehicle, model variants, country specifications, features/applications that may not be available in your region, or changes subsequent to the printing of this owner’s manual.

Refer to the purchase documentation relating to your specific vehicle to confirm the features.

Keep this manual in the vehicle for quick reference.

Canadian Vehicle Owners

A French language manual can be obtained from your dealer, at www.helminc.com, or from:

Propriétaires Canadiens

On peut obtenir un exemplaire de ce guide en français auprès du concessionnaire ou à l'adresse suivante:

Helm, Incorporated
Attention: Customer Service
47911 Halyard Drive
Plymouth, MI 48170
USA

Using this Manual

To quickly locate information about the vehicle, use the Index in the back of the manual. It is an alphabetical list of what is in the manual and the page number where it can be found.

Danger, Warning, and Caution

Warning messages found on vehicle labels and in this manual describe hazards and what to do to avoid or reduce them.

Litho in U.S.A.
Part No. 84295534 C Third Printing

©2020 General Motors LLC. All Rights Reserved.

⚠ Danger

Danger indicates a hazard with a high level of risk which will result in serious injury or death.

⚠ Warning

Warning indicates a hazard that could result in injury or death.

Caution

Caution indicates a hazard that could result in property or vehicle damage.

A circle with a slash through it is a safety symbol which means “Do not,” “Do not do this,” or “Do not let this happen.”

Symbols

The vehicle has components and labels that use symbols instead of text. Symbols are shown along with the text describing the operation or information relating to a specific component, control, message, gauge, or indicator.

: Shown when the owner’s manual has additional instructions or information.

: Shown when the service manual has additional instructions or information.

⇨ : Shown when there is more information on another page — “see page.”

Vehicle Symbol Chart

Here are some additional symbols that may be found on the vehicle and what they mean. See the features in this manual for information.

: Air Conditioning System

: Air Conditioning Refrigerant Oil

: Airbag Readiness Light

: Antilock Brake System (ABS)

: Brake System Warning Light

: Dispose of Used Components Properly

: Do Not Apply High Pressure Water

: Engine Coolant Temperature

: First Responder

: Flame/Fire Prohibited

: Flammable

: Forward Collision Alert

: Fuse Block Cover Lock Location

: Fuses

: High Voltage

: ISOFIX/LATCH System Child Restraints

: Keep Fuse Block Covers Properly Installed

: Lane Change Alert

: Lane Departure Warning

: Lane Keep Assist

: Malfunction Indicator Lamp

: Oil Pressure

P : Park Assist

: Pedestrian Ahead Indicator

: Power

: Rear Cross Traffic Alert

: Registered Technician

: Remote Vehicle Start

: Seat Belt Reminders

: Side Blind Zone Alert

: Tire Pressure Monitor

: Traction Control/StabiliTrak/ Electronic Stability Control (ESC)

: Under Pressure

: Vehicle Ahead Indicator

Instrument Panel Overview

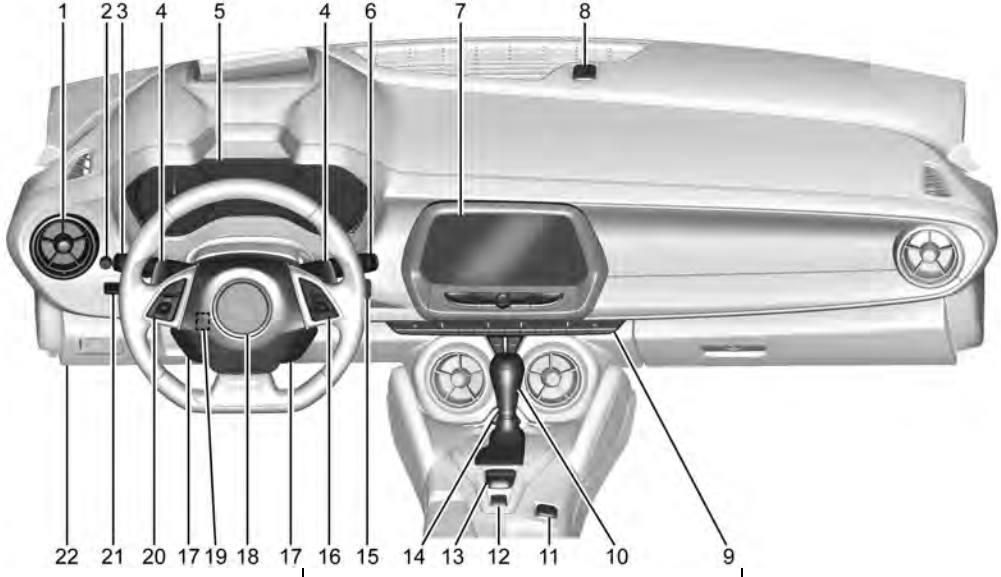

1. *Air Vents* ⇨ *150*.
2. *Instrument Panel Illumination Control* ⇨ *133*.
3. *Exterior Lamp Controls* ⇨ *130*.

   Turn Signal Lever. See *Turn and Lane-Change Signals* ⇨ *133*.

   Headlamp High/Low-Beam Changer ⇨ *130*.
4. Tap Shift (If Equipped). See *Manual Mode* ⇨ *186*.

   Active Rev Match ⇨ *190* (If Equipped).
5. *Instrument Cluster* ⇨ *98*.
6. *Windshield Wiper/Washer* ⇨ *92*.
7. *Infotainment* ⇨ *137*.
8. Light Sensor. See *Automatic Headlamp System* ⇨ *131*.
9. *Automatic Climate Control System* ⇨ *143* or *Dual Automatic Climate Control System* ⇨ *146* (If Equipped).

   Heated and Ventilated Front Seats ⇨ *48* (If Equipped).
10. Shift Lever. See *Automatic Transmission* ⇨ *183* or *Manual Transmission* ⇨ *188*.
11. *Power Outlets* ⇨ *94*.
12. *Electric Parking Brake* ⇨ *192*.
13. *Traction Control/Electronic Stability Control* ⇨ *194*.

    Driver Mode Control ⇨ *196*.
14. *Hazard Warning Flashers* ⇨ *132*.
15. ENGINE START/STOP Button. See *Ignition Positions* ⇨ *175*.
16. *Steering Wheel Controls* ⇨ *92*.

    Driver Information Center (DIC) Controls. See *Driver Information Center (DIC)* ⇨ *117*.
17. Audio Controls. See *Steering Wheel Controls* ⇨ *92*.
18. *Horn* ⇨ *92*.
19. *Steering Wheel Adjustment* ⇨ *92* (Out of View).
20. *Cruise Control* ⇨ *202*.

    Heated Steering Wheel ⇨ *92* (If Equipped).

    Forward Collision Alert (FCA) System ⇨ *208* (If Equipped).
21. *Head-Up Display (HUD)* ⇨ *120* (If Equipped).
22. Data Link Connector (DLC) (Out of View). See *Malfunction Indicator Lamp* ⇨ *110*.

    Hood Release (Out of View). See *Hood* ⇨ *222*.

Keys, Doors, and Windows

Keys and Locks
Keys 7
Remote Keyless Entry (RKE) System 8
Remote Keyless Entry (RKE) System Operation 8
Remote Vehicle Start 16
Door Locks 18
Power Door Locks 20
Delayed Locking 20
Automatic Door Locks 21
Lockout Protection 21

Doors
Trunk 22

Vehicle Security
Vehicle Security 24
Vehicle Alarm System 24
Immobilizer 25
Immobilizer Operation 25

Exterior Mirrors
Convex Mirrors 26
Power Mirrors 27
Heated Mirrors 27
Automatic Dimming Mirror 27
Reverse Tilt Mirrors 27

Interior Mirrors
Interior Rearview Mirrors 28
Manual Rearview Mirror 28
Automatic Dimming Rearview Mirror 28
Rear Camera Mirror 28

Windows
Windows 31
Power Windows 31
Sun Visors 33

Roof
Sunroof 34
Convertible Top 35

Keys and Locks

Keys

⚠ Warning

Leaving children in a vehicle with a Remote Keyless Entry (RKE) transmitter is dangerous and children or others could be seriously injured or killed. They could operate the power windows or other controls or make the vehicle move. The windows will function with the RKE transmitter in the vehicle, and children or others could be caught in the path of a closing window. Do not leave children in a vehicle with an RKE transmitter.

The key, inside the Remote Keyless Entry (RKE) transmitter, can be used for all locks.

To remove the key, press the button on the side of the RKE transmitter near the bottom, and pull the key out. Never pull the key out without pressing the button.

See your dealer if a new key is needed.

If locked out of the vehicle, see *Roadside Assistance Program* ⇨ *328*.

With an active OnStar or connected service plan, an OnStar Advisor may remotely unlock the vehicle. See *OnStar Overview* ⇨ *338*.

Remote Keyless Entry (RKE) System

See *Radio Frequency Statement* ⇨ *334*.

If there is a decrease in the Remote Keyless Entry (RKE) operating range:

- Check the distance. The transmitter may be too far from the vehicle.
- Check the location. Other vehicles or objects may be blocking the signal.
- Check the transmitter's battery. See “Battery Replacement” later in this section.
- If the transmitter is still not working correctly, see your dealer or a qualified technician for service.

Remote Keyless Entry (RKE) System Operation

The Keyless Access system allows for vehicle entry when the Remote Keyless Entry (RKE) transmitter is within 1 m (3 ft). See “Keyless Access Operation” later in this section.

The RKE transmitter may work up to 60 m (197 ft) away outside the vehicle.

Other conditions can affect the performance of the transmitter. See *Remote Keyless Entry (RKE) System* ⇨ *8*.

With Remote Start Shown

: Press to lock all doors.

The turn signal indicators may flash and/or the horn may sound on the second press to indicate locking. See *Vehicle Personalization* ⇨ *125*.

If the driver door is open when is pressed and Open Door Anti-Lockout is enabled, all doors will lock and then the driver door will immediately unlock. See *Vehicle Personalization* ⇨ *125*. If the passenger door is open when is pressed, all doors lock.

Pressing may also arm the alarm system. See *Vehicle Alarm System* ⇨ *24*.

: Press to unlock the driver door. Press unlock again within five seconds to unlock all doors. The RKE transmitter can be programmed to unlock all doors on the first button press. See *Vehicle Personalization* ⇨ *125*.

The turn signal indicators may flash and/or the horn may sound to indicate unlocking. See *Vehicle Personalization* ⇨ *125*.

Pressing will disarm the alarm system. See *Vehicle Alarm System* ⇨ *24*.

If equipped, press and hold on the RKE transmitter to open the windows remotely, if enabled. See *Vehicle Personalization* ⇨ *125*.

: If equipped, press and release and then immediately press and hold for at least four seconds to start the engine from outside the vehicle using the RKE transmitter. See *Remote Vehicle Start* ⇨ *16*.

: Press twice quickly to release the trunk.

: If equipped, press and release , then immediately press and hold continuously to open the convertible top all the way. The vehicle must be off to operate the convertible top with the RKE transmitter. The top will stop movement approximately one second after is released. To stop the top immediately, press , , or on the RKE transmitter. will only open the convertible top.

The convertible top can also be opened using a button in the overhead console. See *Convertible Top* ⇨ *35*.

: Press and release to initiate vehicle locator. The exterior lamps flash and the horn chirps three times.

Press and hold for at least three seconds to sound the panic alarm. The horn sounds and the turn signals flash for 30 seconds, or until is pressed again or the ignition is turned on.

Convertible Top

- Do not try to start the vehicle while using the RKE transmitter to open the convertible top. Release on the RKE transmitter and ENGINE START/STOP. Wait a few seconds before starting the vehicle normally.
- The passive door unlock feature may not operate properly while using the RKE transmitter to open the convertible top.

The convertible top can also be opened using a button in the overhead console. See *Convertible Top* ⇨ *35*.

Keyless Access Operation

The Keyless Access system lets you lock and unlock the doors and access the trunk without removing the RKE transmitter from your pocket, purse, briefcase, etc. The RKE transmitter should be within 1 m (3 ft) of the trunk or door being opened. There will be buttons on the outside door handles.

Keyless Access can be programmed to unlock all doors on the first lock/unlock press from the driver door. Keyless Access can also be turned Off. See *Vehicle Personalization* ⇨ *125*.

If equipped with memory seats, RKE transmitters 1 and 2 are linked to the seating positions of memory 1 or 2. See *Memory Seats* ⇨ *44*.

Keyless Unlocking/Locking from the Driver Door

When the doors are locked and the RKE transmitter is within 1 m (3 ft) of the driver door handle, pressing the lock/unlock button on the driver door handle will unlock the driver door. If the lock/unlock button is pressed again within five seconds, the passenger door will unlock. Pull the door handle to unlatch the door.

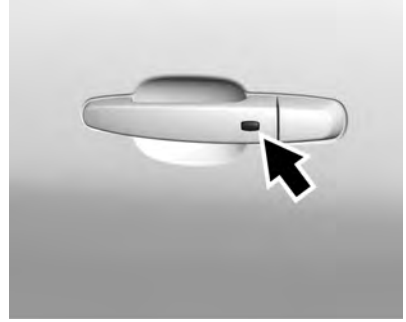

Driver Side Shown, Passenger Side Similar

Pressing the lock/unlock button will cause all doors to lock if any of the following occur:

- It has been more than five seconds since the first lock/unlock button press.
- Two lock/unlock button presses were used to unlock all doors.
- Any vehicle door has opened and all doors are now closed.

Keyless Unlocking/Locking from the Passenger Door

When the doors are locked and the RKE transmitter is within 1 m (3 ft) of the passenger door handle, pressing the lock/unlock button on the passenger door handle will unlock all doors.

Pressing the lock/unlock button will cause all doors to lock if any of the following occur:

- The lock/unlock button was used to unlock all doors.
- Any vehicle door has opened and all doors are now closed.

Disable/Enable Keyless Unlocking of Exterior Door Handles and Trunk

If equipped, keyless unlocking of the exterior door handles and trunk can be disabled and enabled.

Disabling Keyless Unlocking:

With the vehicle off, press and hold 🔒 and 🔓 on the RKE transmitter at the same time for approximately three seconds. The turn signal lamps will flash four times quickly to indicate access is disabled. Using any exterior handle to unlock the doors or open the trunk will cause the turn signal lamps to flash four times quickly, indicating access is disabled. If disabled, disarm the alarm system before starting the vehicle.

Enabling Keyless Unlocking:

With the vehicle off, press and hold 🔒 and 🔓 on the RKE transmitter at the same time for approximately three seconds. The turn signal lamps will flash twice quickly to indicate access is enabled.

Passive Locking

With Keyless Access the vehicle will lock several seconds after all doors are closed if the vehicle is off and at least one transmitter has been removed or none remain in the vehicle.

If other electronic devices interfere with the RKE transmitter signal, the vehicle may not detect the RKE transmitter inside the vehicle.
If passive locking is enabled, the doors may lock with the RKE transmitter inside the vehicle. Do not leave the RKE transmitter in an unattended vehicle.

To customize the doors to automatically lock when exiting the vehicle, see “Remote Lock, Unlock, Start” under *Vehicle Personalization* ⇨ *125*.

Temporary Disable of Passive Locking

Temporarily disable passive locking by pressing and holding 🔓 on the interior door switch with a door open for at least four seconds, or until

three chimes are heard. Passive locking will then remain disabled until 🔓 on the interior door is pressed, or until the vehicle is turned on.

Remote Left In Vehicle Alert

When the vehicle is turned off and an RKE transmitter is left in the vehicle, the horn will chirp three times after all doors are closed. See *Vehicle Personalization* ⇨ *125*.

Remote No Longer In Vehicle Alert

If the vehicle is on with a door open, and then all doors are closed, the vehicle will check for RKE transmitters inside. If an RKE transmitter is not detected, the Driver Information Center (DIC) will display NO REMOTE DETECTED and the horn will chirp three times.

This occurs only once each time the vehicle is driven.

See *Vehicle Personalization* ⇨ *125*.

Keyless Trunk Opening

When the doors are locked, press the touch pad to open the trunk if the RKE transmitter is within 1 m (3 ft).

Key Access

To access a vehicle with a weak transmitter battery, see *Door Locks* ⇨ *18*.

Programming Transmitters to the Vehicle

Only RKE transmitters programmed to the vehicle will work. If a transmitter is lost or stolen, a replacement can be purchased and programmed through your dealer. The vehicle can be reprogrammed so that lost or stolen transmitters no longer work. Any remaining transmitters will need to be reprogrammed. Each vehicle can have up to eight transmitters matched to it.

Programming with Recognized Transmitters

A new transmitter can be programmed to the vehicle when there are two recognized transmitters. To program, the vehicle must be off and all of the transmitters, both currently recognized and new, must be with you.

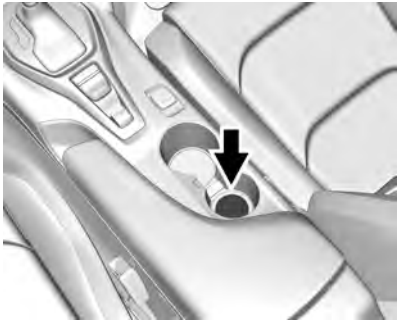

1. Remove the key from the RKE transmitter.
2. Place the two recognized transmitters in the rear cupholder in the center console.

3. Remove the key lock cylinder cap on the driver door handle. See *Door Locks* ⇨ *18*. Insert the vehicle key of the new transmitter into the key lock cylinder on the driver door handle and turn the key to the unlock position five times within 10 seconds.
4. The DIC displays READY FOR REMOTE #3, 4 or 5, 6,7, or 8.

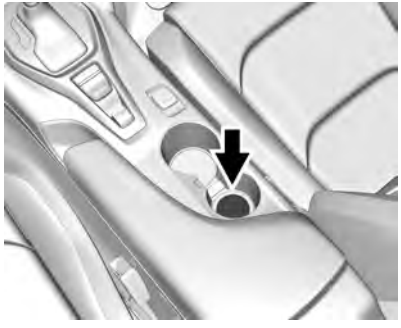

5. Replace the recognized transmitters with a new transmitter. Place the new transmitter in the rear cupholder in the center console.
6. Press ENGINE START/STOP. When the transmitter is learned, the DIC will show that it is ready to program the next transmitter.
7. Remove the transmitter from the cupholder and press 🔓 or 🔒.

   To program additional transmitters, repeat Steps 3–5.

   When all additional transmitters are programmed, press and hold ENGINE START/STOP for 12 seconds to exit programming mode.
8. Put the key back into the transmitter.
9. Replace the key lock cylinder cap on the driver door handle. See *Door Locks* ⇨ *18*.

Programming without Recognized Transmitters

If two currently recognized transmitters are not available, follow this procedure to program up to eight transmitters. This feature is not available in Canada. This procedure will take approximately 30 minutes to complete. The vehicle must be off and all of the transmitters to be programmed must be with you.

1. Remove the key from the RKE transmitter.
2. Remove the key lock cylinder cap on the driver door handle. See *Door Locks* ⇨ *18*. Insert the vehicle key of the transmitter into the key lock cylinder on the driver door handle and turn the key to the unlock position five times within 10 seconds.

   The DIC displays REMOTE LEARN PENDING, PLEASE WAIT.

3. Wait for 10 minutes until the DIC displays PRESS ENGINE START BUTTON TO LEARN and then press ENGINE START/STOP.

   The DIC display will again show REMOTE LEARN PENDING, PLEASE WAIT.

4. Repeat Step 2 two additional times. After the third time, all previously known transmitters will no longer work with the vehicle. Remaining transmitters can be relearned during the next steps.

   The DIC display should now show READY FOR REMOTE # 1.

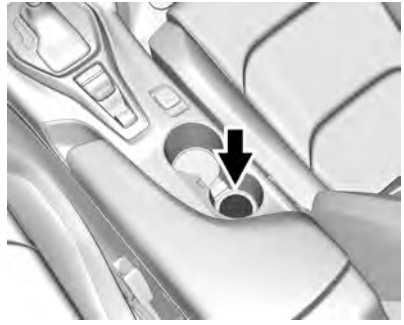

5. Place the new transmitter into the rear cupholder in the center console.

6. Press ENGINE START/STOP. When the transmitter is learned, the DIC will show that it is ready to program the next transmitter.

7. Remove the transmitter from the cupholder and press 🔓 or 🔒.

   To program additional transmitters, repeat Steps 4–6.

   When all additional transmitters are programmed, press and hold ENGINE START/STOP for 12 seconds to exit programming mode.

8. Put the key back into the transmitter.

9. Replace the key lock cylinder cap on the driver door handle. See *Door Locks* ⇨ *18*.

Starting the Vehicle with a Low Transmitter Battery

If the transmitter battery is weak or if there is interference with the signal, the DIC may display NO REMOTE DETECTED or NO REMOTE KEY WAS DETECTED PLACE KEY IN TRANSMITTER POCKET THEN START YOUR VEHICLE.

To start the vehicle:

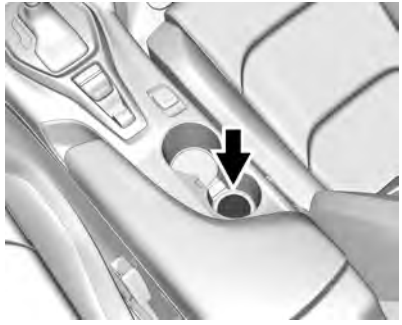

1. Place the transmitter in the rear cupholder in the center console.
2. With the vehicle in P (Park) or N (Neutral), press the brake pedal and ENGINE START/STOP.

   Replace the transmitter battery as soon as possible.

Battery Replacement

⚠ Warning

Never allow children to play with the RKE transmitter. The transmitter contains a small battery, which can be a choking hazard. If swallowed, internal burns can occur, resulting in severe injury or death. Seek medical attention immediately if a battery is swallowed.

⚠ Warning

To avoid personal injury, do not touch metal surfaces on the RKE transmitter when it has been exposed to extreme heat. These surfaces can be hot to the touch at temperatures above 59 °C (138 °F).

Caution

When replacing the battery, do not touch any of the circuitry on the transmitter. Static from your body could damage the transmitter.

Caution

Always replace the battery with the correct type. Replacing the battery with an incorrect type could potentially create a risk of battery explosion. Dispose of used batteries according to instructions and local laws. Do not attempt to burn, crush, or cut the used battery, and avoid exposing the battery to environments with extremely low air pressures or high temperatures.

Replace the battery if the REPLACE BATTERY IN REMOTE KEY message displays in the DIC.

The battery is not rechargeable. To replace the battery:

1. Press the button on the side of the RKE transmitter and pull the key out. Never pull the key out without pressing the button.

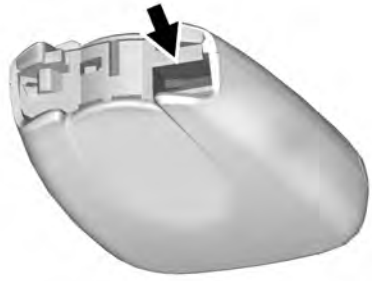

2. Separate the two halves of the transmitter using a flat tool inserted into the area near the key slot.

3. Remove the battery by pushing on the battery and sliding it toward the bottom of the transmitter.
4. Insert the new battery, positive side facing the back cover. Push the battery down until it is held in place. Replace with a CR2032 or equivalent battery.
5. Snap the battery cover back on to the transmitter.
6. Reinsert the key.

Remote Vehicle Start

If equipped, this feature allows the engine to be started from outside the vehicle.

: This button will be on the RKE transmitter if equipped with remote start.

The climate control system will use the previous settings during a remote start. The rear window defogger and heated and ventilated seats, if equipped, may also come on. See "Remote Start Heated and

Ventilated Seats" in *Heated and Ventilated Front Seats* ⇨ *48* and "Remote Start Auto Heat Seats" or "Remote Start Auto Cool Seats" in *Vehicle Personalization* ⇨ *125*.

Laws in some local communities may restrict the use of remote starters. For example, some laws may require a person using remote start to have the vehicle in view. Check local regulations for any requirements.

Other conditions can affect the performance of the transmitter. See *Remote Keyless Entry (RKE) System* ⇨ *8*.

Starting the Engine Using Remote Start

To start the engine using the remote start feature:

1. Press and release 🔒.
2. Immediately after completing Step 1, press and hold ⟲ for at least four seconds or until the turn signal lamps flash. The turn signal lamps flashing confirms the request to remote start the vehicle has been received.

   When the engine starts, the parking lamps will turn on and remain on as long as the engine is running. The vehicle's doors will be locked and the climate control system may come on.

   The engine will continue to run for 15 minutes. After 30 seconds, repeat the steps for a 15-minute time extension. Remote start can be extended only once.

Start the vehicle before driving.

If the vehicle is low on fuel, do not use the remote start feature. The vehicle may run out of fuel.

Extending Engine Run Time

The engine run time can also be extended by another 15 minutes, if during the first 15 minutes Steps 1 and 2 are repeated while the engine is still running. An extension can be requested, 30 seconds after starting. This provides a total of 30 minutes.

The remote start can only be extended once.

When the remote start is extended, the second 15-minute period is added on to the first 15 minutes for a total of 30 minutes.

A maximum of two remote starts, or a remote start with an extension, are allowed between ignition cycles.

The ignition must be turned on and then off before the remote start procedure can be used again.

Canceling a Remote Start

To cancel a remote start, do one of the following:

- Press and hold ⟲ until the parking lamps turn off.
- Turn on the hazard warning flashers.
- Turn the vehicle on and then off.

Conditions in Which Remote Start Will Not Work

The remote start will not operate if:

- The RKE transmitter is in the vehicle.
- The vehicle is not off.
- The hood is not closed.
- The hazard warning flashers are on.
- There is an emission control system malfunction.
- The engine coolant temperature is too high.
- The oil pressure is low.
- Two remote vehicle starts, or a single remote start with an extension, have already been used.
- The vehicle is not in P (Park).

Door Locks

⚠ Warning

Unlocked doors can be dangerous.

- Passengers, especially children, can easily open the doors and fall out of a moving vehicle. The doors can be unlocked and opened while the vehicle is moving. The chance of being thrown out of the vehicle in a crash is increased if the doors are not locked. So, all passengers should wear seat belts properly and the doors should be locked whenever the vehicle is driven.
- Young children who get into unlocked vehicles may be unable to get out. A child can be overcome by extreme heat and can suffer

(Continued)

Warning (Continued)

permanent injuries or even death from heat stroke. Always lock the vehicle whenever leaving it.

- Outsiders can easily enter through an unlocked door when you slow down or stop the vehicle. Locking the doors can help prevent this from happening.

To lock or unlock the doors from outside the vehicle:

- Press 🔒 or 🔓 on the Remote Keyless Entry (RKE) transmitter.
- Use Keyless Access. See *Remote Keyless Entry (RKE) System Operation* ⇨ *8*.
- Use the key in the driver door. The key cylinder is covered with a cap.

To lock or unlock the doors from inside the vehicle:

- Press 🔒 or 🔓 on the power door lock switch.
- Pulling an interior door handle will unlock the door. Pulling the door handle again unlatches it.

Keyless Access

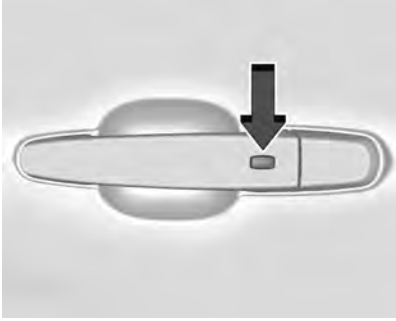

The RKE transmitter must be within 1 m (3 ft) of the trunk or door being opened. Press the button on the door handle to open. See “Keyless Access Operation” in *Remote Keyless Entry (RKE) System Operation* ⇨ *8*.

Driver Door Key Lock Cylinder Access (In Case of Dead Battery)

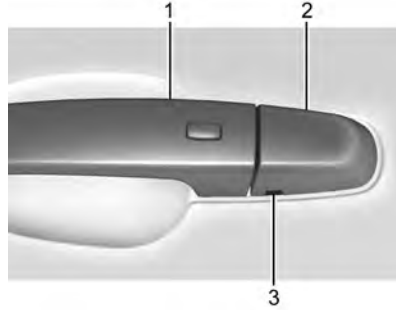

To access the driver door key lock cylinder:

1. Pull the door handle (1) to the open position and hold it open until cap removal is complete.
2. Insert the key into the slot (3) on the bottom of the cap (2) and lift the key upward.
3. Move the cap (2) rearward and remove.
4. Use the key in the cylinder.

To replace the cap:

1. Pull the door handle (1) to the open position and hold it open until cap installation is complete.

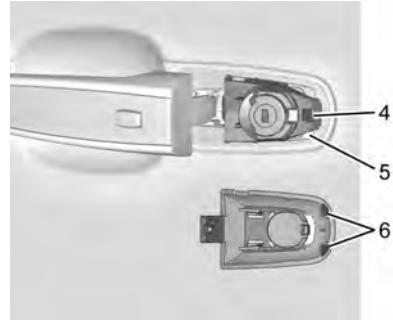

2. Insert the two tabs (6) at the back of the cap between the seal (5) and the metal base (4).

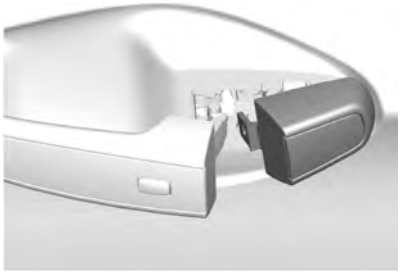

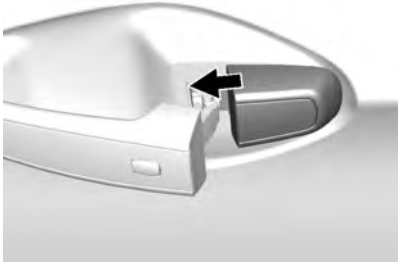

3. Slide the cap forward and press the forward edge to install the cap in place.
4. Release the door handle.
5. Check that the cap is secure.

Free-Turning Locks

The door key lock cylinder turns freely when either the wrong key is used, or the correct key is not fully inserted. The free-turning door lock feature prevents the lock from being forced open. To reset the lock, turn it to the vertical position with the correct key fully inserted. Remove the key and insert it again. If this does not reset the lock, turn the key halfway around in the cylinder and repeat the reset procedure.

Power Door Locks

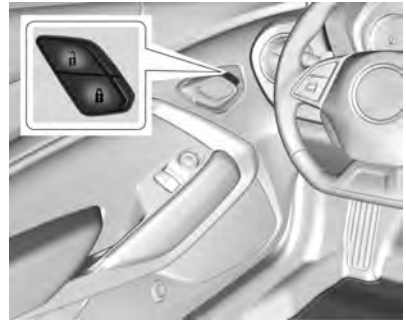

: Press to lock the doors. The indicator light in the switch will illuminate when activated.

: Press to unlock the doors.

Delayed Locking

This feature delays the locking of the doors until five seconds after all doors are closed.

Delayed locking can only be turned on when the Open Door Anti-Lockout feature has been turned off.

When 🔒 is pressed on the power door lock switch while the door is open, a chime will sound three times indicating delayed locking is active.

The doors will lock automatically five seconds after all doors are closed. If a door is reopened before that time, the five-second timer will reset when all doors are closed again.

Press 🔒 on the door lock switch again or press 🔒 on the RKE transmitter to lock the doors immediately.

This feature can also be programmed. See *Vehicle Personalization* ⇨ *125*.

Automatic Door Locks

When the doors are closed, the ignition is on, and the shift lever is moved out of P (Park) for automatic transmissions, or the vehicle speed is above 13 km/h (8 mph) for manual transmissions, the doors will lock.

To unlock the doors:

- Press 🔓 on a power door lock switch.
- If equipped with an automatic transmission, shift the transmission into P (Park).
- If equipped with a manual transmission, turn the vehicle off when parked.

Automatic door locking cannot be disabled. Automatic door unlocking can be enabled through vehicle personalization. See *Vehicle Personalization* ⇨ *125*.

Lockout Protection

If the vehicle is on or in ACC/ACCESSORY and the power door lock switch is pressed with the driver door open, all the doors will lock and only the driver door will unlock.

If the vehicle is off and locking is requested while a door is open, when all doors are closed the vehicle will check for RKE transmitters inside. If an RKE transmitter is detected and the number of RKE transmitters inside has not reduced, the driver door will unlock and the horn will chirp three times.

Lockout Protection can be manually overridden with the driver door open by pressing and holding 🔒 on the power door lock switch.

Open Door Anti-Lockout

If Open Door Anti-Lockout has been turned on and the vehicle is off, the driver door is open, and locking is requested, all the doors will lock and the driver door will remain unlocked. The Open Door Anti-Lockout feature can be turned on or off. See *Vehicle Personalization* ⇨ *125*.

Doors

Trunk

⚠ Warning

Exhaust gases can enter the vehicle if it is driven with the liftgate, trunk/hatch open, or with any objects that pass through the seal between the body and the trunk/hatch or liftgate. Engine exhaust contains carbon monoxide (CO) which cannot be seen or smelled. It can cause unconsciousness and even death.

If the vehicle must be driven with the liftgate, or trunk/hatch open:

- Close all of the windows.
- Fully open the air outlets on or under the instrument panel.
- Adjust the climate control system to a setting that brings in only outside air

(Continued)

Warning (Continued)

and set the fan speed to the highest setting. See "Climate Control Systems" in the Index.

- If the vehicle has a power liftgate, disable the power liftgate function.

For more information about carbon monoxide, see *Engine Exhaust* ⇨ *182*.

Trunk Release

To open the trunk from outside of the vehicle:

- Press ×2 twice quickly on the Remote Keyless Entry (RKE) transmitter.
- Press the touch pad in the area above the license plate after unlocking all doors.
- For Keyless Access, press the touch pad in the area above the license plate when the transmitter is within 1 m (3 ft) of the rear of the vehicle.

For automatic transmissions, the vehicle must be in P (Park). For manual transmissions, the vehicle must be off, or stationary with the parking brake set.

From inside the vehicle, press on the lower portion of the driver door.

Emergency Trunk Release Handle

Caution
Do not use the emergency trunk release handle as a tie-down or anchor point when securing items in the trunk as it could damage the handle.

There is a glow-in-the-dark emergency trunk release handle on the trunk lid. This handle will glow following exposure to light. Pull the release handle to open the trunk from the inside.

After pulling the emergency trunk release handle, push the handle back into the bezel.

Emergency Trunk Release (Convertible Only)

If the trunk lid cannot be opened using the RKE transmitter or the trunk release button:

1. Locate the key extender in the glove box.

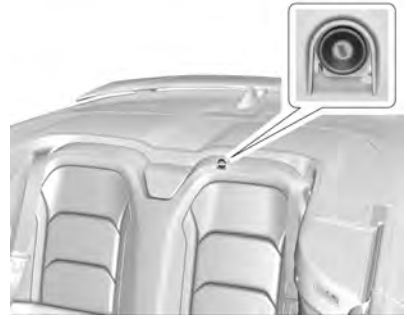

2. Locate the manual release beside the rear seat cushion on the driver side.
3. Push down on the upper rear seat cushion on the driver side until the manual release is visible.
4. Remove the key from the RKE transmitter.

5. Remove any additional items attached to the key — such as keys, rings, or tags — then fully insert the key into the manual release.

6. Place the key extender over the key head until the key extender stops.
7. Firmly turn the key clockwise to unlatch the trunk lid.
8. Remove the key.
9. Store the key extender in the glove box.
10. Return the key to the RKE transmitter.

Vehicle Security

This vehicle has theft-deterrent features; however, they do not make the vehicle impossible to steal.

Vehicle Alarm System

This vehicle has an anti-theft alarm system.

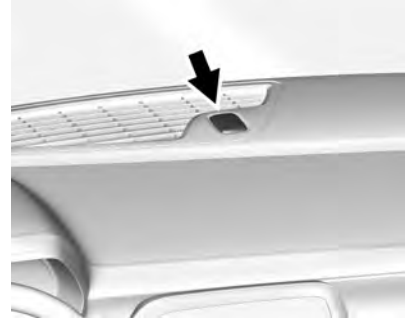

The security light, on the instrument panel near the windshield, indicates the status of the system:

Off : Alarm system is disarmed.

On Solid : Vehicle is secured during the delay to arm the system.

Fast Flash : Vehicle is unsecured. A door, the hood, or the trunk is open.

Slow Flash : Alarm system is armed.

Arming the Alarm System

1. Turn off the vehicle.
2. Lock the vehicle with one of the following:
   - Use the RKE transmitter.
   - With a door open, press the inside 🔒.
3. After 30 seconds the alarm system will arm, and the indicator light will begin to slowly flash indicating the alarm system is operating.

   Pressing 🔒 on the RKE transmitter a second time will bypass the 30-second delay and immediately arm the alarm system.

The vehicle alarm system will not arm if the doors are locked with the key.

If the driver door is opened without first unlocking with the RKE transmitter, the horn will chirp and the lights will flash to indicate a pre-alarm. If the vehicle is not started, or the door is not unlocked by pressing 🔒 on the RKE transmitter during the 10-second pre-alarm, the alarm will be activated.

The alarm will also be activated if the passenger door, the trunk, or the hood is opened without first disarming the system. When the alarm is activated, the turn signals flash and the horn sounds for about 30 seconds. The alarm system will then re-arm to monitor for the next unauthorized event.

Disarming the System

To disarm the system or turn off the alarm if it has been activated, do one of the following:

- Press 🔒 on the RKE transmitter.
- Start the vehicle.

To avoid setting off the alarm by accident:

- Lock the vehicle with the RKE transmitter after all occupants have left the vehicle and all doors are closed.
- Always unlock the vehicle with the RKE transmitter. Unlocking the driver door with the key will not disarm the alarm.

How to Detect a Tamper Condition

If 🔒 is pressed on the RKE transmitter and the horn chirps and the lights flash three times, a previous alarm occurred while the system was armed.

If the alarm has been activated, a message will appear on the Driver Information Center (DIC).

Immobilizer

See *Radio Frequency Statement* ⇨ *334*.

Immobilizer Operation

This vehicle has a passive theft-deterrent system.

The system does not have to be manually armed or disarmed.

The vehicle is automatically immobilized when the transmitter leaves the vehicle.

The immobilization system is disarmed when the ignition button is pressed and a valid transmitter is found in the vehicle.

The security light in the instrument cluster comes on when there is a problem with arming or disarming the theft-deterrent system.

The system has one or more transmitters matched to an immobilizer control unit in your vehicle. Only a correctly matched transmitter will start the vehicle. If the transmitter is ever damaged, you may not be able to start your vehicle.

When trying to start the vehicle, the security light comes on briefly when the ignition is turned on.

If the engine does not start and the security light stays on, there is a problem with the system. Turn the vehicle off and try again.

If the RKE transmitter appears to be undamaged, try another transmitter. Or, you may try placing the transmitter in the rear cupholder in the center console. See “Starting the Vehicle with a Low Transmitter Battery” under *Remote Keyless Entry (RKE) System Operation* ⇨ *8*.

If the engine does not start with the other transmitter or when the transmitter is in the rear cupholder in the center console, your vehicle needs service. See your dealer who can service the theft-deterrent system and have a new transmitter programmed to the vehicle.

Do not leave the transmitter or device that disarms or deactivates the theft-deterrent system in the vehicle.

Exterior Mirrors

Convex Mirrors

⚠ Warning

A convex mirror can make things, like other vehicles, look farther away than they really are. If you cut too sharply into the right lane, you could hit a vehicle on the right. Check the inside mirror or glance over your shoulder before changing lanes.

The passenger side mirror is convex shaped.

A convex mirror's surface is curved so more can be seen from the driver seat.

Power Mirrors

To adjust each mirror:

1. Press ▭◂ or ▸▭ to select the driver or passenger side mirror. The indicator light will illuminate.
2. Press the arrows on the control pad to move the mirror in the desired position.
3. Adjust each outside mirror so that a little of the vehicle and the area behind it can be seen.
4. Press ▭◂ or ▸▭ again to deselect the mirror.

Memory Mirrors

The vehicle may have memory mirrors. See *Memory Seats* ⇨ *44*.

Side Blind Zone Alert (SBZA)

The vehicle may have SBZA. See *Side Blind Zone Alert (SBZA)* ⇨ *210*.

Lane Change Alert (LCA)

The vehicle may have LCA. See *Lane Change Alert (LCA)* ⇨ *211*.

Heated Mirrors

If equipped with heated mirrors:

: The rear window defogger also heats the outside mirrors.

See *Dual Automatic Climate Control System* ⇨ *146*.

Automatic Dimming Mirror

If the vehicle is equipped with an automatic dimming outside mirror on the driver side, the mirror will adjust for the glare of headlamps behind you.

Reverse Tilt Mirrors

If equipped with memory seats, the passenger and/or driver mirror tilts to a preselected position when the vehicle is in R (Reverse). This allows the curb to be seen when parallel parking.

The mirror(s) return to the original position when:

- The vehicle is shifted out of R (Reverse), or remains in R (Reverse) for about 30 seconds.
- The ignition is turned off.
- The vehicle is driven in R (Reverse) above a set speed.

To turn this feature on or off, see *Vehicle Personalization* ⇨ *125*.

Interior Mirrors

Interior Rearview Mirrors

Adjust the rearview mirror for a clear view of the area behind the vehicle.

Do not spray glass cleaner directly on the mirror. Use a soft towel dampened with water.

Manual Rearview Mirror

If equipped, push the tab forward for daytime use and pull it for nighttime use to avoid glare from the headlamps from behind.

Automatic Dimming Rearview Mirror

If equipped, automatic dimming reduces the glare of headlamps from behind. The dimming feature comes on when the vehicle is started.

Rear Camera Mirror

If equipped, the automatic dimming mirror provides a wide angle camera view of the area behind the vehicle.

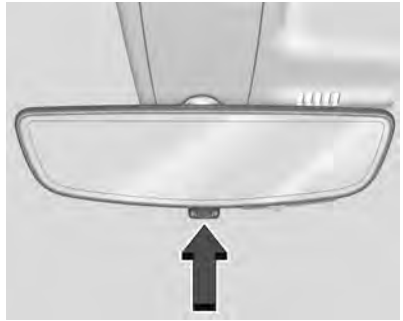

Pull the tab to turn on the display. Push the tab to turn it off. When off the mirror is automatic dimming. Adjust the mirror for a clear view of the area behind the vehicle while the display is off.

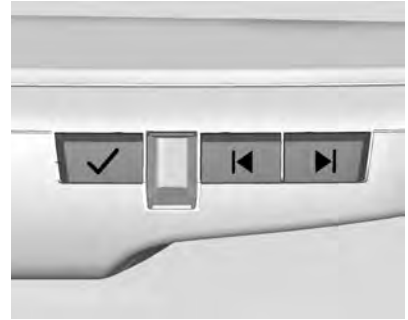

Press ✓ to scroll through the adjustment options.

Press |◀ and ▶| to adjust the settings using the indicators on the mirror. The indicators will remain visible for five seconds after the last button activation, and the settings will remain saved.

The adjustment options are:

- Brightness

- Zoom

- Tilt

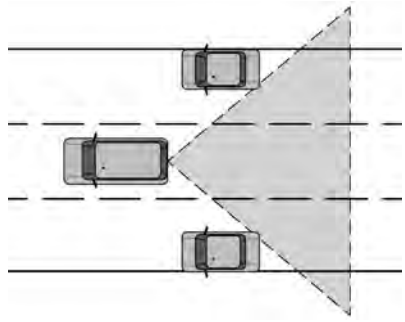

⚠ Warning

The Rear Camera Mirror (RCM) has a limited view. Portions of the road, vehicles, and other objects may not be seen. Do not drive or park the vehicle using only this camera. Objects may appear closer than they are. Check the outside mirrors or glance over your shoulder when making lane changes or merging. Failure to use proper care may result in injury, death, or vehicle damage.

Troubleshooting

See your dealer for service if a blue screen and ⚠ are displayed in the mirror, and the display shuts off. Also, push the tab as indicated to return to the automatic dimming mode.

The Rear Camera Mirror may not work properly or display a clear image if:

- There is glare from the sun or headlamps. This may obstruct objects from view. If needed, push the tab to turn off the display.

Coupe

Convertible

- Dirt, snow, or other debris blocks the camera lens. Clean the lens with a soft damp cloth.
- The camera's mounting on the vehicle has been damaged, and/or the position or the mounting angle of the camera has changed.

Windows

⚠ Warning

Never leave a child, a helpless adult, or a pet alone in a vehicle, especially with the windows closed in warm or hot weather. They can be overcome by the extreme heat and suffer permanent injuries or even death from heat stroke.

Power Windows

⚠ Warning

Children could be seriously injured or killed if caught in the path of a closing window. Never leave the Remote Keyless Entry (RKE) transmitter in a vehicle with children. When there are children in the rear seat, use the window lockout switch to prevent operation of the windows. See *Keys* ⇨ *7*.

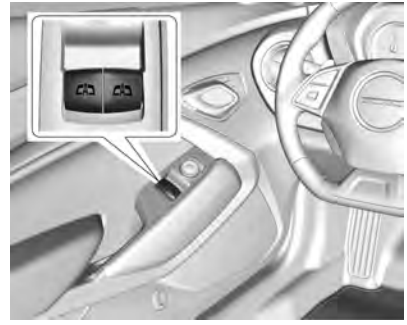

Coupe

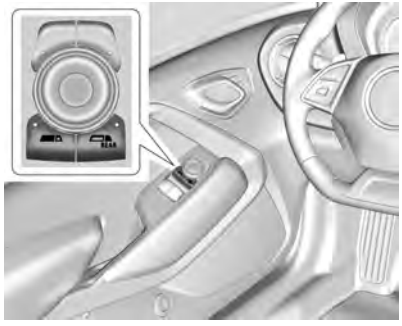

Convertible

Power windows work when the vehicle is on, in ACC/ACCESSORY, or when Retained Accessory Power (RAP) is active. See *Retained Accessory Power (RAP)* ⇨ *179*.

Using the window switch, press to open or pull to close the window.

The windows may be temporarily disabled if the window switches are used repeatedly within a short time.

Window Express Movement

All windows can be opened without holding the window switch. Press the switch down fully and quickly release to express open the window.

If equipped, pull the window switch up fully and quickly release to express close the window.

Briefly press or pull the window switch in the same direction to stop that window's express movement.

Front window express-up motion is disabled when the corresponding rear window is not fully closed.

Window Selector Switch

This feature allows the window switches to operate both the front and rear windows. Press the front or rear button to operate the desired windows. The light will indicate which windows are being operated. The default operation is the front windows.

Window Automatic Reversal System

The express-close feature will reverse window movement if it comes in contact with an object. Extreme cold or ice could cause the window to auto-reverse. The window will operate normally after the object or condition is removed.

Automatic Reversal System Override

⚠ Warning

If automatic reversal system override is active, the window will not reverse automatically. You or others could be injured and the window could be damaged. Before using automatic reversal system override, make sure that all people and obstructions are clear of the window path.

When the engine is on, override the automatic reversal system by pulling and holding the window switch if conditions prevent it from closing.

Programming the Power Windows

Programming may be necessary if the vehicle's battery has been disconnected or discharged. If the window is unable to express-close, program each express-close window:

1. Close all doors.
2. Turn the ignition on or to ACC/ ACCESSORY.
3. Partially open the window to be programmed. Then close it and continue to pull the switch briefly after the window has fully closed.
4. Open the window and continue to press the switch briefly after the window has fully opened.

Window Operation with Convertible Top

Windows will automatically lower fully when the convertible top is lowered or raised. See *Convertible Top* ⇨ *35*.

The rear windows should always be raised before the front windows to ensure the best seal.

Remote Window Operation

If equipped, this feature allows the windows to be opened remotely.

If enabled, press and hold 🔓 on the RKE transmitter. See *Vehicle Personalization* ⇨ *125*.

Window Indexing

If the window freezes to the door:

1. Push the top of the window inward while opening the door.
2. Clear all snow and ice from the door and glass.
3. Open the window completely and then close it.
4. Close the door.

When fully closed, indexing automatically lowers the window a small amount when the door is opened. When the door is closed, the window will raise to its previous position. If either window does not index properly, it could be due to loss of power. Before seeing your dealer for service, program the power windows.

Sun Visors

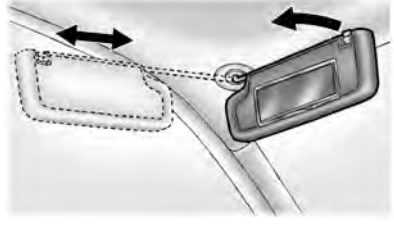

Pull the sun visor down to block glare. Detach the sun visor from the center mount to pivot to the side window and, if equipped, extend along the rod.

Roof

Sunroof

If equipped, the sunroof only operates when the ignition is on or in ACC/ACCESSORY, or when Retained Accessory Power (RAP) is active. See *Retained Accessory Power (RAP)* ⇨ *179*.

The sunroof switch is on the overhead console.

Express-Open : Press to the second detent and release to express-open the sunroof. Press the switch again to stop the movement.

Press and hold to close the sunroof.

Open/Close (Manual Mode) : Press and hold to open the sunroof. Press and hold to close the sunroof. Release the switch to stop the movement.

Vent : Press and release to vent the sunroof. Press and hold to close the vent.

A deflector automatically raises when the sunroof is opened and retracts while the sunroof closes.

If the sunshade is closed, it opens automatically when the sunroof opens past the vented position.

Caution

Forcing the sunshade forward of the sliding glass panel may cause damage and the sunroof may not

(Continued)

Caution (Continued)

operate properly. Always close the glass panel before closing the sunshade.

The sunshade can be opened manually, but must be closed manually.

The sunroof glass panel cannot be opened or closed if the vehicle has an electrical failure.

Dirt and debris may collect on the sunroof seal or in the track. This could cause an issue with sunroof

operation or noise. It could also plug the water drainage system. Periodically open the sunroof and remove any obstacles or loose debris. Wipe the sunroof seal and roof sealing area using a clean cloth, mild soap, and water. Do not remove grease from the sunroof.

Convertible Top

If equipped with a convertible top, review the following before operating:

⚠ Warning

While opening or closing the convertible top, people can be injured by the moving parts of the tonneau cover or convertible top. Maintain visual contact with the top while it is being operated.

Caution

Follow these guidelines when operating the convertible top or damage can occur:

- Remove all items from the roof, trunk lid, or tonneau cover before operating.
- Remove all objects from the trunk that may contact the convertible top when it is operated.
- Do not leave the vehicle with the convertible top open.
- Do not exceed 50 km/h (31 mph) until the top has completely closed or opened.
- Do not open or close the top while driving in high wind conditions.
- Do not operate the convertible top multiple times in a short period of

(Continued)

Caution (Continued)

time without starting the engine to avoid draining the vehicle battery.

- Do not open or store the convertible top when it is dirty or wet. This could result in stains, mildew, or other damage.
- Only store the vehicle with the top fully closed.

Caution

When the convertible top is open, there are sliding covers next to the rear seat on each side of the vehicle. Do not press down on or move these covers as damage may occur to the covers or the convertible top.

Opening the Convertible Top

Using the Overhead Console Switch

1. Remove all objects from the top of the tonneau cover and forward of the rear trunk partition. Place the partition in the rear storage area in the upright position. Fasten both sides of the partition to the posts just below the tonneau cover. See *Rear Storage* ⇨ *89*.
2. Close the trunk.
3. Start the vehicle or place it in ACC/ACCESSORY.
4. When possible, operate the convertible top when the vehicle is stopped. The top can be operated while driving below 50 km/h (31 mph) and will stop if that speed is exceeded. The top operation will take approximately 25 seconds. Make sure the top operation can be completed before that speed is reached.

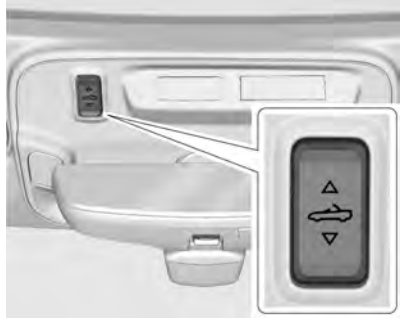

5. Press and hold the bottom of . The windows will automatically lower.
6. After the convertible top is completely open, a Driver Information Center (DIC) message displays. Release the switch.

If the radio is on, the sound may be muted for a brief time due to a new audio system equalization being loaded.

Using the RKE Transmitter

1. If equipped, press and release , and then immediately press and hold continuously to open the convertible top all the way. The vehicle must be off to operate the convertible top with the RKE transmitter.
2. The top will stop movement approximately one second after is released. To stop the top immediately, press , , or on the RKE transmitter. . will only open the convertible top.

See *Remote Keyless Entry (RKE) System* ⇨ *8* and *Remote Keyless Entry (RKE) System Operation* ⇨ *8*.

Closing the Convertible Top

The RKE transmitter cannot be used to close the convertible top.

1. Make sure the sun visors are stored in the center mount position.
2. Remove all objects from the top of the tonneau cover and forward of the partition. Place the partition in the rear storage area in the upright position. Fasten both sides of the partition to the posts just below the tonneau cover. See *Rear Storage* ⇨ *89*.
3. Close the trunk.
4. Start the vehicle or place it in ACC/ACCESSORY.
5. When possible, operate the convertible top when the vehicle is stopped. The top can be operated while driving below 50 km/h (31 mph) and will stop if that speed is exceeded. The top operation will take approximately 25 seconds. Make sure the top operation can be completed before that speed is reached.

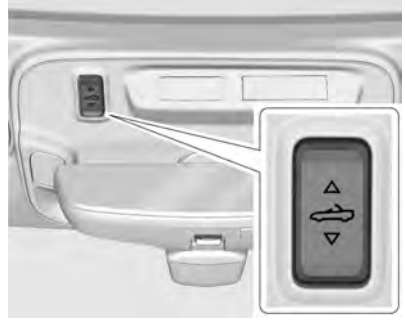

6. Press and hold the top of . The windows will automatically lower.
7. After the convertible top is completely closed, a DIC message displays. Release the switch. Raise the windows if needed.

If the radio is on, the sound may be muted for a brief time due to a new audio system equalization being loaded.

Troubleshooting

Check the following if the convertible top switch is not operating:

- The ignition should be on or in ACC/ACCESSORY, or Retained Accessory Power (RAP) should be active.
- The trunk lid should be closed and the trunk partition in place. A DIC message will display.
- If the ONLY MANUAL OPERATION OF TOP POSSIBLE message is displayed on the DIC, see “Manual Movement of Top” later in this section.
- At cooler outside temperatures, the convertible top may not open. It is possible to close the top down to temperatures of about 0 °C (32 °F). A DIC message will display if the top

will not open due to low temperature. If necessary, move the vehicle to a heated indoor area to operate the top.

- If the top has recently been cycled repeatedly or left in an intermediate state, it will be temporarily disabled. A DIC message displays. Normal operation will be restored within 10 minutes after the system has cooled.
- If the vehicle battery is low, the power top operation may be disabled. Try to start the vehicle. A DIC message displays.
- If the battery has recently been reconnected or if the vehicle has been jump started, the top may not operate until the power windows have been indexed. Complete the power window indexing procedure. See *Power Windows* ⇨ *31*.

Other features may be affected while operating the convertible top:

- The trunk can only be opened with the key until the convertible top is completely opened or closed.
- The windows cannot close while the top is moving.
- When driving with the top not fully secured, chimes can be heard above 80 km/h (50 mph).

If the vehicle battery has been disconnected and reconnected, the fuses were pulled or replaced, or a jump start was performed, the TOP NOT SECURE message may display. Press and hold to open/close the top until this message is cleared.

Partial Top Cycling

If the convertible top operation is stopped before completion, the top will temporarily hold its position. If the ignition is on or in ACC/ACCESSORY, the top will be held for up to five minutes, then pulse down. If the vehicle is moving or off, the amount of time will vary from a few seconds to about a minute.

Beeps and DIC messages will be displayed before the top will move. When this occurs, immediately finish the convertible top operation by pressing again until it completes.

If the top cannot be secured, keep clear of the top components. In some conditions the top may move quickly.

Do not drive with the convertible top in an unsecured position. The top components may move unexpectedly. In some cases the top may not be able to be power operated. If this occurs, follow the DIC messages displayed.

If the tonneau cover is not secured and latched, and the vehicle is moving above 10 km/h (6 mph), the tonneau cover may automatically move to a stable position.

Manual Movement of Top

If the DIC displays the ONLY MANUAL OPERATION OF TOP POSSIBLE message:

1. Press to either open or close the top. Press the switch in the opposite direction if one does not work.
2. If the top moves, continue pressing the switch in that direction for at least five seconds. The top should then work normally.

If the top does not respond in either direction, take it to your dealer for service. If the top is retracted but not latched, use the following procedure to manually close the convertible top and tonneau cover if needed. This requires more than one person.

1. On each side of the tonneau cover, lift and pivot rearward into the fully open position. Hold the front and rear of the tonneau cover at the same time.

2. Lift and move the convertible top forward by pulling on both sides of the front bow into the fully closed position.

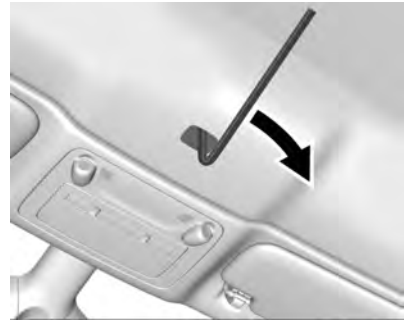

3. Lock the front of the convertible top to the frame by popping out the small cover, inserting a hex wrench, and turning clockwise until it stops.
4. Lift up the tension bow on both sides and raise the tonneau cover to approximately the half raised position, and then allow it to slide into the closed position.
5. Lower the tension bow.

The vehicle can now be driven to your dealer for service. The convertible top will not be completely waterproof and should not be driven over 80 km/h (50 mph) in this position.

Cleaning the Convertible Top

The convertible top should be cleaned often. Do not use high-pressure car washes as these may cause water to enter the vehicle.

Hand wash the convertible top in partial shade. Use mild soap, lukewarm water, and a soft sponge. A chamois or cloth may leave lint on the top, and a brush can chafe the threads in the top fabric. Do not use detergents, harsh cleaners, solvents, or bleaching agents.

Wet the entire top and let the soap remain on the fabric for a few minutes. Wash evenly to avoid spots or rings. When the top is very dirty, use a mild foam-type cleaner. Thoroughly rinse the entire vehicle, then let the top dry in direct sunlight.

To protect the convertible top:

- Make sure the convertible top is completely dry before lowering it.
- Do not get any cleaner on the vehicle's painted finish; it could leave streaks.

Seats and Restraints

Head Restraints
Head Restraints 42

Front Seats
Seat Adjustment 43
Power Seat Adjustment 43
Reclining Seatbacks 44
Memory Seats 44
Seatback Latches 47
Heated and Ventilated Front Seats 48

Rear Seats
Rear Seats 49

Seat Belts
Seat Belts 50
How to Wear Seat Belts Properly 51
Lap-Shoulder Belt 53
Seat Belt Use During Pregnancy 55
Seat Belt Extender 55
Safety System Check 56
Seat Belt Care 56
Replacing Seat Belt System Parts after a Crash 56

Airbag System
Airbag System 57
Where Are the Airbags? 59
When Should an Airbag Inflate? 60
What Makes an Airbag Inflate? 62
How Does an Airbag Restrain? 62
What Will You See after an Airbag Inflates? 62
Passenger Sensing System . . . 64
Servicing the Airbag-Equipped Vehicle 68
Adding Equipment to the Airbag-Equipped Vehicle 68
Airbag System Check 69
Replacing Airbag System Parts after a Crash 70

Child Restraints
Older Children 70
Infants and Young Children 72
Child Restraint Systems 74
Where to Put the Restraint 76
Lower Anchors and Tethers for Children (LATCH System) 77
Replacing LATCH System Parts After a Crash 83
Securing Child Restraints (With the Seat Belt in the Rear Seat) 83
Securing Child Restraints (With the Seat Belt in the Front Seat) 85

Head Restraints

The vehicle's front seats have adjustable head restraints in the outboard seating positions.

⚠ Warning

With head restraints that are not installed and adjusted properly, there is a greater chance that occupants will suffer a neck/spinal injury in a crash. Do not drive until the head restraints for all occupants are installed and adjusted properly.

Adjust the head restraint so that the top of the restraint is at the same height as the top of the occupant's head. This position reduces the chance of a neck injury in a crash.

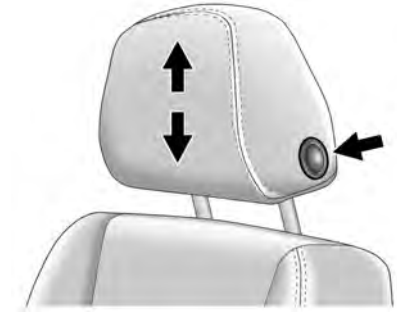

To raise or lower the head restraint, press the button located on the side of the head restraint, and pull up or push the head restraint down, and release the button. Pull and push on the head restraint after the button is released to make sure that it is locked in place.

The front outboard head restraints are not removable.

Front Seats

Seat Adjustment

⚠ Warning

You can lose control of the vehicle if you try to adjust a driver seat while the vehicle is moving. Adjust the driver seat only when the vehicle is not moving.

To adjust the seat position:

1. Pull up on the handle at the front of the seat cushion to unlock it.
2. Move the seat forward or rearward and release the handle.
3. Try to move the seat back and forth to be sure it is locked in place.

Power Seat Adjustment

⚠ Warning

The power seats will work with the ignition off. Children could operate the power seats and be injured. Never leave children alone in the vehicle.

To adjust a power seat, if equipped:

- Move the seat forward or rearward by sliding the horizontal control forward or rearward.
- Raise or lower the front part of the seat cushion by moving the front of the horizontal control up or down.
- Raise or lower the entire seat by moving the entire horizontal control up or down.

Reclining Seatbacks

⚠ Warning

Sitting in a reclined position when the vehicle is in motion can be dangerous. Even when buckled up, the seat belts cannot do their job.

The shoulder belt will not be against your body. Instead, it will be in front of you. In a crash, you could go into it, receiving neck or other injuries.

The lap belt could go up over your abdomen. The belt forces would be there, not at your pelvic bones. This could cause serious internal injuries.

For proper protection when the vehicle is in motion, have the seatback upright. Then sit well back in the seat and wear the seat belt properly.

Do not have a seatback reclined if the vehicle is moving.

To adjust the seatback:

- Tilt the top of the control rearward to recline.
- Tilt the top of the control forward to raise.

Memory Seats

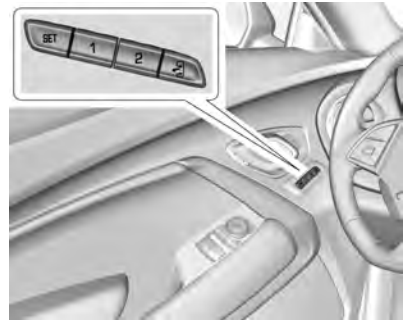

If equipped, memory seats allow two drivers to save and recall their unique seat positions for driving the vehicle, and a shared exit position for getting out of the vehicle. Other feature positions may also be saved, such as power mirrors and power steering wheel, if equipped.

Memory positions are linked to RKE transmitter 1 or 2 for automatic memory recalls.

Before saving, adjust all available memory feature positions. Turn the vehicle on and then press and release SET; a beep will sound. Then immediately press and hold 1, 2, or (Exit) until two beeps sound. To manually recall these positions, press and hold 1, 2, or until the saved position is reached. Follow the instructions under "Saving Memory Positions."

The vehicle identifies the current driver's RKE transmitter number (1–8). See *Remote Keyless Entry (RKE) System Operation* ⇨ *8*. Only RKE transmitters 1 and 2 can be used for automatic memory recalls. A Driver Information Center (DIC) welcome message indicating the transmitter number may display for the first few ignition cycles following a transmitter change. For Seat Entry Memory to work properly, save the positions to the memory button (1 or 2) matching the RKE transmitter number displayed in the DIC welcome message. Carry the linked RKE transmitter when entering the vehicle.

Vehicle Personalization Settings

- To have the Seat Entry Memory movement begin when the vehicle is started, select the Settings menu, then Vehicle, then Seating Position, and then Seat Entry Memory. Select On or Off. See "Seat Entry Memory" later in this section.
- To begin Seat Exit Memory movement when the vehicle is turned off and the driver door is opened, or when the vehicle is turned off with the driver door already opened, select the Settings menu, then Vehicle, then Seating Position, and then Seat Exit Memory. Select On or Off. See "Seat Exit Memory" later in this section.
- See *Vehicle Personalization* ⇨ *125* for additional setting information.

Identifying Driver Number

To identify the driver number:

1. Move your RKE transmitter away from the vehicle.
2. Start the vehicle with another key or RKE transmitter. The DIC should display the driver number for the other RKE transmitter. Turn the vehicle off and remove the key or RKE transmitter from the vehicle.
3. Start the vehicle with the initial key or RKE transmitter. The DIC should display the driver number of your RKE transmitter.

Saving Memory Positions

Read these instructions completely before saving memory positions.

To save preferred driving positions 1 and 2:

1. Turn the vehicle on or to ACC/ACCESSORY.

   A DIC welcome message may indicate driver number 1 or 2.

2. Adjust all available memory features to the desired driving position.
3. Press and release SET; a beep will sound.
4. Immediately press and hold the 1 or 2 memory button matching the above DIC welcome message until two beeps sound.

   If too much time passes between releasing SET and pressing 1, the memory position will not be saved and two beeps will not sound. Repeat Steps 3 and 4.

   1 or 2 corresponds to the driver number. See “Identifying Driver Number” previously in this section.
5. Repeat Steps 1–4 for a second driver using 1 or 2.

To save the position for and Seat Exit Memory features, repeat Steps 1–4 using . This saves the position for getting out of the vehicle.

Save preferred memory feature positions to both 1 and 2 if you are the only driver.

Manually Recalling Memory Positions

Press and hold 1, 2, or to recall the previously saved memory positions if you are driver 1 or 2 identified in the DIC welcome message.

To stop Manual Memory recall movement, release 1, 2, or or press any of the following controls:

- Power seat
- Memory SET
- Power mirror, with the driver or passenger side mirror selected
- Power steering wheel, if equipped

Seat Entry Memory

The vehicle identifies the number of the current driver’s RKE transmitter (1–8). See *Remote Keyless Entry (RKE) System Operation* ⇨ *8*. If the RKE transmitter is 1 or 2, and Seat Entry Memory is enabled in vehicle personalization, the positions saved to the same memory button number 1 or 2 are automatically recalled when the vehicle is turned on, or turned from off to ACC/ ACCESSORY. RKE transmitters 3–8 will not provide automatic memory recalls.

To turn Seat Entry Memory on or off, see “Vehicle Personalization Settings” previously in this section and *Vehicle Personalization* ⇨ *125*.

If equipped with an automatic transmission, the shift lever must be in P (Park) to start Seat Entry Memory recall. Seat Entry Memory recall will complete if the vehicle is shifted out of P (Park) prior to reaching the saved memory position.

If equipped with a manual transmission, the parking brake must be set to start Seat Entry Memory recall. Seat Entry Memory recall will complete if the parking brake is released prior to reaching the saved memory position.

To stop Seat Entry Memory recall movement, turn the vehicle off or press any of the following controls:

- Power seat
- Memory SET, 1, 2, or
- Power mirror, with the driver or passenger side mirror selected
- Power steering wheel, if equipped

If the saved memory seat position does not automatically recall or recalls to the wrong positions, the driver's RKE transmitter number (1 or 2) may not match the memory button number that positions were saved to. Try storing the position to the other memory button or try the other RKE transmitter.

Seat Exit Memory

Seat Exit Memory is not linked to an RKE transmitter. The position saved to is used for all drivers. To turn Seat Exit Memory on or off, see "Vehicle Personalization Settings" previously in this section and *Vehicle Personalization* ⇨ *125*.

If turned on, the position saved to is automatically recalled when one of the following occurs:

- The vehicle is turned off and the driver door is opened within a short time.
- The vehicle is turned off with the driver door open.

To stop Seat Exit Memory movement, press any of the following memory controls:

- Power seat
- Memory SET, 1, 2, or
- Power mirror, with the driver or passenger side mirror selected
- Power steering wheel, if equipped

Obstructions

If something has blocked the driver seat and/or power steering wheel while recalling a memory position, the recall may stop. Remove the obstruction and try the recall again. If the memory position still does not recall, see your dealer.

Seatback Latches

To access the rear seats, pull up on the latch on the top of the driver or front passenger seatback. Fold the seatback forward.

⚠ Warning

If either seatback is not locked, it could move forward in a sudden stop or crash. That could cause injury to the person sitting there. Always push and pull on the seatbacks to be sure they are locked.

To return the seatback to the upright position, lift the seatback and manually push it rearward until it locks in place. Push and pull on the seatback to make sure it is locked.

Do not use the power recline control on the outboard side of the seat to raise the seatback. See *Reclining Seatbacks* ⇨ *44*.

Heated and Ventilated Front Seats

⚠ Warning

If temperature change or pain to the skin cannot be felt, the seat heater may cause burns. To reduce the risk of burns, use care when using the seat heater, especially for long periods of time. Do not place anything on the seat that insulates against heat, such as a blanket, cushion, cover, or similar item. This may cause the seat heater to

(Continued)

Warning (Continued)

overheat. An overheated seat heater may cause a burn or may damage the seat.

If available, the engine must be running to operate.

Press or to turn on the heated seat. A light indicates this feature is on.

Press the button once for the highest setting. With each press of the button, the heated seat will change to the next lower setting, and then the off setting. Three lights indicate the highest setting, and one light indicates the lowest.

The passenger seat may take longer to heat up.

Press or to turn on the ventilated seat. A light indicates this feature is on.

Press the button once for the highest setting. With each press of the button, the ventilated seat will change to the next lower setting, and then the off setting. Three lights indicate the highest setting, and one light indicates the lowest.

Remote Start Heated and Ventilated Seats

If equipped, the heated seats will turn on automatically during a remote start if it is cold outside and the ventilated seats will turn on automatically if it is hot outside. The heated and ventilated seat indicators may not come on during this operation.

The heated and ventilated seats may cancel when the vehicle is started. These features can be manually selected after the ignition is turned on.

The temperature performance of an unoccupied seat may be reduced. This is normal.

The heated or ventilated seats will not turn on during a remote start unless they are enabled in the vehicle personalization menu. See *Remote Vehicle Start* ⇨ *16* and *Vehicle Personalization* ⇨ *125*.

Rear Seats

If equipped, the coupe seat can be folded for more cargo space. The rear seat has two designated seating positions. Fold the seat only when the vehicle is parked.

To fold the seatback down:

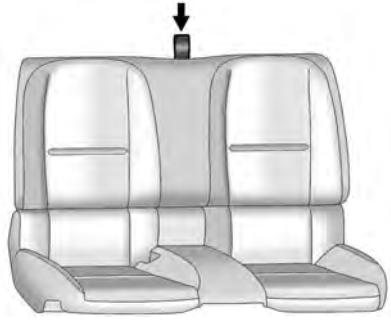

1. Pull on the strap on the top of the rear seatback.
2. Fold the seatback down.

⚠ Warning

A seat belt that is improperly routed, not properly attached, or twisted will not provide the protection needed in a crash. The person wearing the belt could be seriously injured. After raising the rear seatback, always check to be sure that the seat belts are properly routed and attached, and are not twisted.

Lift the seatback up to raise it, and push it back to lock it into place. Make sure the seat belt is not twisted or caught in the seatback.

Push and pull the top of the seatback to be sure it is locked into position.

Seat Belts

This section describes how to use seat belts properly, and some things not to do.

⚠ Warning

Do not let anyone ride where a seat belt cannot be worn properly. In a crash, if you or your passenger(s) are not wearing seat belts, injuries can be much worse than if you are wearing seat belts. You can be seriously injured or killed by hitting things inside the vehicle harder or by being ejected from the vehicle. In addition, anyone who is not buckled up can strike other passengers in the vehicle.

It is extremely dangerous to ride in a cargo area, inside or outside of a vehicle. In a collision, passengers riding in these areas are more likely to be seriously injured or killed. Do not allow

(Continued)

Warning (Continued)

passengers to ride in any area of the vehicle that is not equipped with seats and seat belts.

Always wear a seat belt, and check that all passenger(s) are restrained properly too.

This vehicle has indicators as a reminder to buckle the seat belts. See *Seat Belt Reminders* ⇨ *107*.

Why Seat Belts Work

When riding in a vehicle, you travel as fast as the vehicle does. If the vehicle stops suddenly, you keep going until something stops you. It could be the windshield, the instrument panel, or the seat belts!

When you wear a seat belt, you and the vehicle slow down together. There is more time to stop because you stop over a longer distance and, when worn properly, your strongest bones take the forces from the seat belts. That is why wearing seat belts makes such good sense.

Questions and Answers About Seat Belts

Q: Will I be trapped in the vehicle after a crash if I am wearing a seat belt?

A: You *could* be — whether you are wearing a seat belt or not. Your chance of being conscious during and after a crash, so you *can* unbuckle and get out, is *much* greater if you are belted.

Q: If my vehicle has airbags, why should I have to wear seat belts?

A: Airbags are supplemental systems only. They work *with* seat belts — not instead of them. Whether or not an airbag is provided, all occupants still have to buckle up to get the most protection.

Also, in nearly all states and in all Canadian provinces, the law requires wearing seat belts.

How to Wear Seat Belts Properly

Follow these rules for everyone's protection.

There are additional things to know about seat belts and children, including smaller children and infants. If a child will be riding in the vehicle, see *Older Children* ⇨ *70* or *Infants and Young Children* ⇨ *72*. Review and follow the rules for children in addition to the following rules.

It is very important for all occupants to buckle up. Statistics show that unbelted people are hurt more often in crashes than those who are wearing seat belts.

There are important things to know about wearing a seat belt properly.

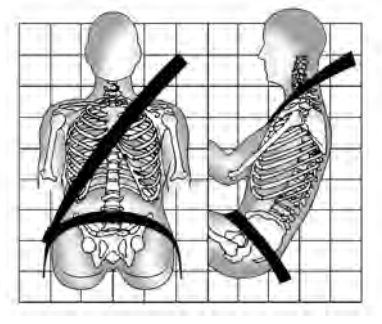

- Sit up straight and always keep your feet on the floor in front of you (if possible).
- Always use the correct buckle for your seating position.
- Wear the lap part of the belt low and snug on the hips, just touching the thighs. In a crash, this applies force to the strong pelvic bones and you would be less likely to slide under the lap belt. If you slid under it, the belt would apply force on your abdomen. This could cause serious or even fatal injuries.
- Wear the shoulder belt over the shoulder and across the chest. These parts of the body are best able to take belt restraining forces. The shoulder belt locks if there is a sudden stop or crash.

⚠ Warning

You can be seriously injured, or even killed, by not wearing your seat belt properly.

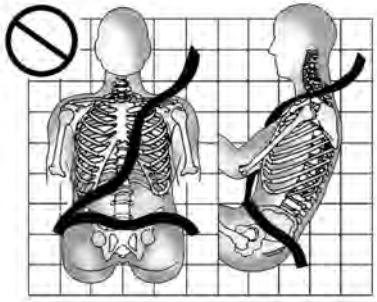

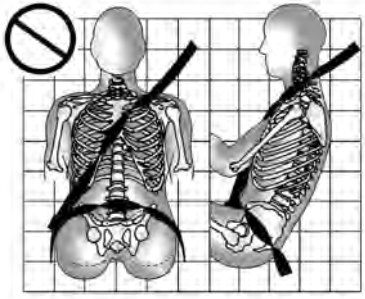

Never allow the lap or shoulder belt to become loose or twisted.

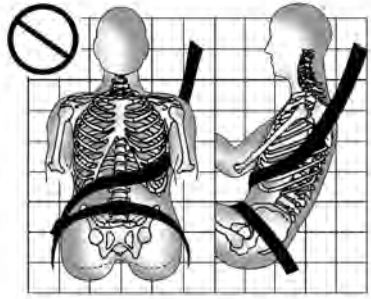

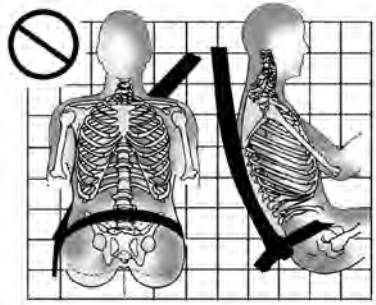

Never wear the shoulder belt under both arms or behind your back.

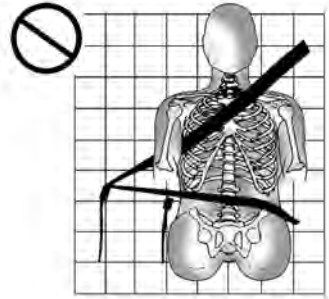

Always use the correct buckle for your seating position.

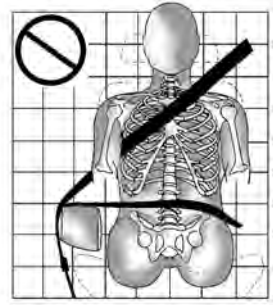

Never route the lap or shoulder belt over an armrest.

⚠ Warning

The seat belt can be pinched if it is routed under plastic trim on the seat, such as trim around the rear seatback folding handle or side airbag. In a crash, pinched seat belts might not be able to provide adequate protection. Never allow seat belts to be routed under plastic trim pieces.

Lap-Shoulder Belt

All seating positions in the vehicle have a lap-shoulder belt.

The following instructions explain how to wear a lap-shoulder belt properly.

1. Adjust the seat, if the seat is adjustable, so you can sit up straight. To see how, see “Seats” in the Index.

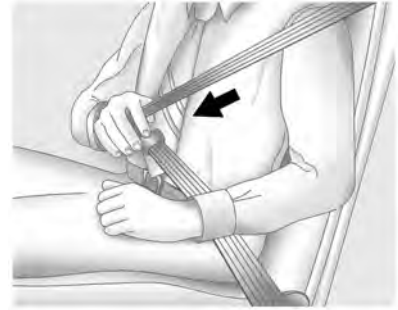

2. Pick up the latch plate and pull the belt across you. Do not let it get twisted.

   The lap-shoulder belt may lock if you pull the belt across you very quickly. If this happens, let the belt go back slightly to unlock it. Then pull the belt across you more slowly.

   If the shoulder portion of a passenger belt is pulled out all the way, the child restraint locking feature may be engaged. See *Child Restraint Systems* ⇨ *74*. If this occurs, let the belt go back all the way and start again. If the locking feature stays engaged after letting the belt go back to stowed position on the seat, move the seat rearward or recline the seat until the shoulder belt retractor lock releases.

   Engaging the child restraint locking feature in the front outboard seating position may affect the passenger sensing system. See *Passenger Sensing System* ⇨ *64*.

   On some models, if the shoulder portion of the driver belt is pulled out all the way, the shoulder belt retractor lock feature may be engaged. If this happens, let the belt go back all the way and start again. See the Camaro High Performance supplement for more information.

3. Push the latch plate into the buckle until it clicks.

   Pull up on the latch plate to make sure it is secure. If the belt is not long enough, see *Seat Belt Extender* ⇨ *55*.

   Position the release button on the buckle so that the seat belt could be quickly unbuckled if necessary.

4. To make the lap part tight, pull up on the shoulder belt.

To unlatch the belt, push the button on the buckle. The belt should return to its stowed position.

Always stow the seat belt slowly. If the seat belt webbing returns quickly to the stowed position, the retractor may lock and cannot be pulled out. If this happens, pull the seat belt straight out firmly to unlock the webbing, and then release it. If the webbing is still locked in the retractor, see your dealer.

Before a door is closed, be sure the seat belt is out of the way. If a door is slammed against a seat belt, damage can occur to both the seat belt and the vehicle.

Seat Belt Pretensioners

This vehicle has seat belt pretensioners for the front outboard occupants. Although the seat belt pretensioners cannot be seen, they are part of the seat belt assembly. They can help tighten the seat belts during the early stages of a moderate to severe frontal, near frontal, or rear crash if the threshold conditions for pretensioner

activation are met. Seat belt pretensioners can also help tighten the seat belts in a side crash or a rollover event.

Pretensioners work only once. If the pretensioners activate in a crash, the pretensioners and probably other parts of the vehicle's seat belt system will need to be replaced. See *Replacing Seat Belt System Parts after a Crash* ⇨ *56*.

Do not sit on the outboard seat belt while entering or exiting the vehicle or at any time while sitting in the seat. Sitting on the seat belt can damage the webbing and hardware.

Rear Seat Belt Comfort Guides

Rear seat belt comfort guides may provide added seat belt comfort for older children who have outgrown booster seats and for some adults. When installed on a shoulder belt, the comfort guide positions the shoulder belt away from the neck and head.

Comfort guides are available through your dealer for the rear outboard seating positions. Instructions are included with the guides.

Seat Belt Use During Pregnancy

Seat belts work for everyone, including pregnant women. Like all occupants, they are more likely to be seriously injured if they do not wear seat belts.

A pregnant woman should wear a lap-shoulder belt, and the lap portion should be worn as low as possible, below the rounding, throughout the pregnancy.

The best way to protect the fetus is to protect the mother. When a seat belt is worn properly, it is more likely that the fetus will not be hurt in a crash. For pregnant women, as for anyone, the key to making seat belts effective is wearing them properly.

Seat Belt Extender

If the vehicle's seat belt will fasten around you, you should use it.

But if a seat belt is not long enough, your dealer will order you an extender. When you go in to order it, take the heaviest coat you will wear, so the extender will be long enough for you. To help avoid personal injury, do not let someone else use it, and use it only for the seat it is made to fit. The extender has been designed for adults. Never use it for securing child restraints. For more

information on the proper use and fit of seat belt extenders see the instruction sheet that comes with the extender.

Safety System Check

Periodically check the seat belt reminder, seat belts, buckles, latch plates, retractors, shoulder belt height adjusters (if equipped), and seat belt anchorages to make sure they are all in working order. Look for any other loose or damaged seat belt system parts that might keep a seat belt system from performing properly. See your dealer to have it repaired. Torn, frayed, or twisted seat belts may not protect you in a crash. Torn or frayed seat belts can rip apart under impact forces. If a belt is torn or frayed, have it replaced immediately. If a belt is twisted, it may be possible to untwist by reversing the latch plate on the webbing. If the twist cannot be corrected, ask your dealer to fix it.

Make sure the seat belt reminder light is working. See *Seat Belt Reminders* ⇨ *107*.

Keep seat belts clean and dry. See *Seat Belt Care* ⇨ *56*.

Seat Belt Care

Keep belts clean and dry.

Seat belts should be properly cared for and maintained.

Seat belt hardware should be kept dry and free of dust or debris. As necessary, exterior hard surfaces and seat belt webbing may be lightly cleaned with mild soap and water. Ensure there is not excessive dust or debris in the mechanism. If dust or debris exists in the system please see the dealer. Parts may need to be replaced to ensure proper functionality of the system.

⚠ Warning

Do not bleach or dye seat belt webbing. It may severely weaken the webbing. In a crash, they might not be able to provide adequate protection. Clean and rinse seat belt webbing only with mild soap and lukewarm water. Allow the webbing to dry.

Replacing Seat Belt System Parts after a Crash

⚠ Warning

A crash can damage the seat belt system in the vehicle. A damaged seat belt system may not properly protect the person using it, resulting in serious injury or even death in a crash. To help make sure the seat belt systems are working properly after a crash,

(Continued)

Warning (Continued)

have them inspected and any necessary replacements made as soon as possible.

After a minor crash, replacement of seat belts may not be necessary. But the seat belt assemblies that were used during any crash may have been stressed or damaged. See your dealer to have the seat belt assemblies inspected or replaced.

New parts and repairs may be necessary even if the seat belt system was not being used at the time of the crash.

Have the seat belt pretensioners checked if the vehicle has been in a crash, or if the airbag readiness light stays on after you start the vehicle or while you are driving. See *Airbag Readiness Light* ⇨ *108*.

Airbag System

The vehicle has the following airbags:

- A frontal airbag for the driver.
- A frontal airbag for the front outboard passenger.
- A knee airbag for the driver.
- A knee airbag for the front outboard passenger.
- A seat-mounted side impact airbag for the driver.
- A seat-mounted side impact airbag for the front outboard passenger.

The vehicle may have the following airbags:

- A roof-rail airbag for the driver and the passenger seated directly behind the driver.
- A roof-rail airbag for the front outboard passenger and the passenger seated directly behind the front outboard passenger.

All vehicle airbags have the word AIRBAG on the trim or on a label near the deployment opening.

For frontal airbags, the word AIRBAG is on the center of the steering wheel for the driver and on the instrument panel for the front outboard passenger.

For knee airbags, the word AIRBAG is on the lower part of the instrument panel.

For seat-mounted side impact airbags, the word AIRBAG is on the side of the seatback or side of the seat closest to the door.

For roof-rail airbags, the word AIRBAG is on the ceiling or trim.

Airbags are designed to supplement the protection provided by seat belts. Even though today's airbags are also designed to help reduce the risk of injury from the force of an inflating bag, all airbags must inflate very quickly to do their job.

Here are the most important things to know about the airbag system:

⚠ Warning

You can be severely injured or killed in a crash if you are not wearing your seat belt, even with airbags. Airbags are designed to work with seat belts, not replace them. Also, airbags are not designed to inflate in every crash. In some crashes seat belts are the only restraint. See *When Should an Airbag Inflate?* ⇨ *60*.

Wearing your seat belt during a crash helps reduce your chance of hitting things inside the vehicle or being ejected from it. Airbags are “supplemental restraints” to the seat belts. Everyone in the vehicle should wear a seat belt properly, whether or not there is an airbag for that person.

⚠ Warning

Because airbags inflate with great force and faster than the blink of an eye, anyone who is up against, or very close to, any airbag when it inflates can be seriously injured or killed. Do not sit unnecessarily close to any airbag, as you would be if sitting on the edge of the seat or leaning forward. Seat belts help keep you in position before and during a crash. Always wear a seat belt, even with airbags. The driver should sit as far back as possible while still maintaining control of the vehicle. The seat belts and the front outboard passenger airbags are most effective when you are sitting well back and upright in the seat with both feet on the floor.

(Continued)

Warning (Continued)

Occupants should not lean on or sleep against the door or side windows in seating positions with seat-mounted side impact airbags and/or roof-rail airbags.

⚠ Warning

Children who are up against, or very close to, any airbag when it inflates can be seriously injured or killed. Always secure children properly in the vehicle. To read how, see *Older Children* ⇨ *70* or *Infants and Young Children* ⇨ *72*.

There is an airbag readiness light on the instrument cluster, which shows the airbag symbol. The system checks the airbag electrical system for malfunctions. The light tells you if there is an electrical problem. See *Airbag Readiness Light* ⇨ *108*.

Where Are the Airbags?

The driver frontal airbag is in the center of the steering wheel.

The front outboard passenger frontal airbag is in the passenger side instrument panel.

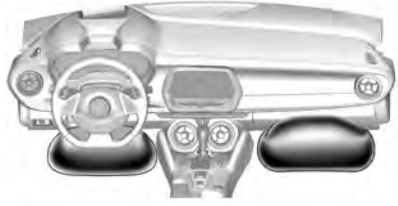

The driver knee airbag is below the steering column. The front outboard passenger knee airbag is below the glove box.

Coupe Models, Driver Side Shown, Passenger Side Similar

On coupe models, the driver and front outboard passenger seat-mounted side impact airbags are in the sides of the seatbacks closest to the door.

Convertible Models, Driver Side Shown, Passenger Side Similar

On convertible models, the driver and front outboard passenger seat-mounted side impact airbags are in the sides of the seatbacks closest to the door.

Coupe Models, Driver Side Shown, Passenger Side Similar

On coupe models, the roof-rail airbags for the driver, front outboard passenger, and second row outboard passengers are in the ceiling above the side windows.

⚠ Warning

If something is between an occupant and an airbag, the airbag might not inflate properly or it might force the object into that person causing severe injury

(Continued)

Warning (Continued)

or even death. The path of an inflating airbag must be kept clear. Do not put anything between an occupant and an airbag, and do not attach or put anything on the steering wheel hub or on or near any other airbag covering.

Do not use seat accessories that block the inflation path of a seat-mounted side impact airbag.

Never secure anything to the roof of a vehicle with roof-rail airbags by routing a rope or tie-down through any door or window opening. If you do, the path of an inflating roof-rail airbag will be blocked.

When Should an Airbag Inflate?

This vehicle is equipped with airbags. See *Airbag System* ⇨ *57*. Airbags are designed to inflate if the

impact exceeds the specific airbag system's deployment threshold. Deployment thresholds are used to predict how severe a crash is likely to be in time for the airbags to inflate and help restrain the occupants. The vehicle has electronic sensors that help the airbag system determine the severity of the impact. Deployment thresholds can vary with specific vehicle design.

Frontal airbags are designed to inflate in moderate to severe frontal or near frontal crashes to help reduce the potential for severe injuries, mainly to the driver's or front outboard passenger's head and chest.

Whether the frontal airbags will or should inflate is not based primarily on how fast the vehicle is traveling. It depends on what is hit, the direction of the impact, and how quickly the vehicle slows down.

Frontal airbags may inflate at different crash speeds depending on whether the vehicle hits an object straight on or at an angle, and whether the object is fixed or moving, rigid or deformable, narrow or wide.

Frontal airbags are not intended to inflate during vehicle rollovers, rear impacts, or in many side impacts.

In addition, the vehicle has advanced technology frontal airbags. Advanced technology frontal airbags adjust the restraint according to crash severity.

Knee airbags are designed to inflate in moderate to severe frontal or near frontal impacts. Knee airbags are not designed to inflate during vehicle rollovers, in rear impacts, or in many side impacts.

The vehicle may have a seat position sensor that enables the sensing system to monitor the position of the front outboard passenger seat. If equipped, the passenger seat position sensor and the passenger seat belt buckle provide information that is used to determine if the passenger knee airbag should inflate.

Seat-mounted side impact airbags are designed to inflate in moderate to severe side crashes depending on the location of the impact. Seat-mounted side impact airbags are not designed to inflate in frontal impacts, near frontal impacts, rollovers, or rear impacts.
A seat-mounted side impact airbag is designed to inflate on the side of the vehicle that is struck.

Roof-rail airbags, if equipped, are designed to inflate in moderate to severe side crashes depending on the location of the impact. In addition, these roof-rail airbags are designed to inflate during a rollover or in a severe frontal impact. Roof-rail airbags are not designed to inflate in rear impacts. Both roof-rail airbags will inflate when either side of the vehicle is struck, if the sensing system predicts that the vehicle is about to roll over on its side, or in a severe frontal impact.

In any particular crash, no one can say whether an airbag should have inflated simply because of the vehicle damage or repair costs.

What Makes an Airbag Inflate?

In a deployment event, the sensing system sends an electrical signal triggering a release of gas from the inflator. Gas from the inflator fills the airbag causing the bag to break out of the cover. The inflator, the airbag, and related hardware are all part of the airbag module.

For airbag locations, see *Where Are the Airbags?* ⇨ *59*.

How Does an Airbag Restrain?

In moderate to severe frontal or near frontal collisions, even belted occupants can contact the steering wheel or the instrument panel. In moderate to severe side collisions, even belted occupants can contact the inside of the vehicle.

Airbags supplement the protection provided by seat belts by distributing the force of the impact more evenly over the occupant's body.

Rollover capable roof-rail airbags, if equipped, are designed to help contain the head and chest of occupants in the outboard seating positions in the first and second rows. The rollover capable roof-rail airbags are designed to help reduce the risk of full or partial ejection in rollover events, although no system can prevent all such ejections.

But airbags would not help in many types of collisions, primarily because the occupant's motion is not toward those airbags. See *When Should an Airbag Inflate?* ⇨ *60*.

Airbags should never be regarded as anything more than a supplement to seat belts.

What Will You See after an Airbag Inflates?

After frontal, knee, and seat-mounted side impact airbags inflate, they quickly deflate, so quickly that some people may not even realize the airbags inflated. Roof-rail airbags may still be at least partially inflated for some time after they inflate. Some components of the airbag module may be hot for several minutes. For location of the airbags, see *Where Are the Airbags?* ⇨ *59*.

The parts of the airbag that come into contact with you may be warm, but not too hot to touch. There may be some smoke and dust coming from the vents in the deflated airbags. Airbag inflation does not prevent the driver from seeing out of the windshield or being able to steer the vehicle, nor does it prevent people from leaving the vehicle.

⚠ Warning

When an airbag inflates, there may be dust in the air. This dust could cause breathing problems for people with a history of asthma or other breathing trouble. To avoid this, everyone in the vehicle should get out as soon as it is safe to do so. If you have breathing problems but cannot get out of the vehicle after an airbag inflates, then get fresh air by opening a window or a door. If you experience breathing problems following an airbag deployment, you should seek medical attention.

The vehicle has a feature that may automatically unlock the doors, turn on the interior lamps and hazard warning flashers, and shut off the fuel system after the airbags inflate. The feature may also activate, without airbag inflation, after an event that exceeds a predetermined threshold. After turning the ignition off and then on again, the fuel system will return to normal operation; the doors can be locked, the interior lamps can be turned off, and the hazard warning flashers can be turned off using the controls for those features. If any of these systems are damaged in the crash they may not operate as normal.

⚠ Warning

A crash severe enough to inflate the airbags may have also damaged important functions in the vehicle, such as the fuel system, brake and steering systems, etc. Even if the vehicle appears to be drivable after a moderate crash, there may be concealed damage that could make it difficult to safely operate the vehicle.

Use caution if you should attempt to restart the engine after a crash has occurred.

In many crashes severe enough to inflate the airbag, windshields are broken by vehicle deformation. Additional windshield breakage may also occur from the front outboard passenger airbag.

- Airbags are designed to inflate only once. After an airbag inflates, you will need some new parts for the airbag system. If you do not get them, the airbag system will not be there to help protect you in another crash. A new system will include airbag modules and possibly other parts. The service manual for the vehicle covers the need to replace other parts.
- The vehicle has a crash sensing and diagnostic module which records information after a crash. See *Vehicle Data Recording and Privacy* ⇨ 336 and *Event Data Recorders* ⇨ 336.
- Let only qualified technicians work on the airbag systems. Improper service can mean that

an airbag system will not work properly. See your dealer for service.

Passenger Sensing System

The vehicle has a passenger sensing system for the front outboard passenger position. The passenger airbag status indicator will light on the overhead console when the vehicle is started.

United States

Canada and Mexico

The words ON and OFF, or the symbols for on and off, will be visible during the system check. When the system check is complete, either the word ON or OFF, or the symbol for on or off will be visible. See *Passenger Airbag Status Indicator* ⇨ *108*.

The passenger sensing system turns off the front outboard passenger frontal airbag and knee airbag under certain conditions. No other airbag is affected by the passenger sensing system.

The passenger sensing system works with sensors that are part of the front outboard passenger seat and seat belt. The sensors are designed to detect the presence of a properly seated occupant and determine if the front outboard passenger frontal airbag and knee airbag should be allowed to inflate or not.

According to accident statistics, children are safer when properly secured in a rear seat in the correct child restraint for their weight and size.

Whenever possible, children aged 12 and under should be secured in a rear seating position.

Never put a rear-facing child seat in the front. This is because the risk to the rear-facing child is so great, if the airbag inflates.

⚠ Warning

A child in a rear-facing child restraint can be seriously injured or killed if the passenger frontal airbag inflates. This is because the back of the rear-facing child restraint would be very close to the inflating airbag. A child in a forward-facing child restraint can be seriously injured or killed if the

(Continued)

Warning (Continued)

passenger frontal airbag inflates and the passenger seat is in a forward position.

Even if the passenger sensing system has turned off the front outboard passenger airbag(s), no system is fail-safe. No one can guarantee that an airbag will not deploy under some unusual circumstance, even though the airbag(s) are off.

Never put a rear-facing child restraint in the front seat, even if the airbag is off. If securing a forward-facing child restraint in the front outboard passenger seat, always move the seat as far back as it will go. It is better to secure child restraints in the rear seat. Consider using another vehicle to transport the child when a rear seat is not available.

The passenger sensing system is designed to turn off the front outboard passenger frontal airbag and knee airbag if:

- The front outboard passenger seat is unoccupied.
- The system determines an infant is present in a child restraint.
- A front outboard passenger takes his/her weight off of the seat for a period of time.
- There is a critical problem with the airbag system or the passenger sensing system.

When the passenger sensing system has turned off the front outboard passenger frontal airbag and knee airbag, the OFF indicator will light and stay lit as a reminder that the airbags are off. See *Passenger Airbag Status Indicator* ⇨ *108*.

The passenger sensing system is designed to turn on the front outboard passenger frontal airbag and knee airbag anytime the system senses that a person of adult size is sitting properly in the front outboard passenger seat. When the passenger sensing system has allowed the airbags to be enabled, the ON indicator will light and stay lit as a reminder that the airbags are active.

For some children, including children in child restraints, and for very small adults, the passenger sensing system may or may not turn off the front outboard passenger frontal airbag and knee airbag, depending upon the person's seating posture and body build. Everyone in the vehicle who has outgrown child restraints should wear a seat belt properly — whether or not there is an airbag for that person.

⚠ Warning

If the airbag readiness light ever comes on and stays on, it means that something may be wrong with the airbag system. To help avoid injury to yourself or others,

(Continued)

Warning (Continued)

have the vehicle serviced right away. See *Airbag Readiness Light* ⇨ *108* for more information, including important safety information.

If the On Indicator Is Lit for a Child Restraint

The passenger sensing system is designed to turn off the front outboard passenger frontal airbag and knee airbag if the system determines that an infant is present in a child restraint. If a child restraint has been installed and the ON indicator is lit:

1. Turn the vehicle off.
2. Remove the child restraint from the vehicle.
3. Remove any additional items from the seat such as blankets, cushions, seat covers, seat heaters, or seat massagers.
4. Reinstall the child restraint following the directions provided by the child restraint manufacturer and refer to *Securing Child Restraints (With the Seat Belt in the Rear Seat)* ⇨ *83* or *Securing Child Restraints (With the Seat Belt in the Front Seat)* ⇨ *85*.

   Make sure the seat belt retractor is locked by pulling the shoulder belt all the way out of the retractor when installing the child restraint, even if the child restraint is equipped with a seat belt lock-off. When the retractor lock is set, the belt can be tightened but not pulled out of the retractor.
5. If, after reinstalling the child restraint and restarting the vehicle, the ON indicator is still lit, turn the vehicle off. Then slightly recline the vehicle seatback and adjust the seat cushion, if adjustable, to make sure that the vehicle seatback is not pushing the child restraint into the seat cushion.

   Also make sure the child restraint is not trapped under the vehicle head restraint. If this happens, adjust the head restraint. See *Head Restraints* ⇨ *42*.
6. Restart the vehicle.

The passenger sensing system may or may not turn off the airbags for a child in a child restraint depending upon the child's size. It is better to secure the child restraint in a rear seat. Never put a rear-facing child restraint in the front seat, even if the ON indicator is not lit.

If the Off Indicator Is Lit for an Adult-Sized Occupant

If a person of adult size is sitting in the front outboard passenger seat, but the OFF indicator is lit, it could be because that person is not sitting properly in the seat or that the child restraint locking feature is engaged. Use the following steps to allow the system to detect that person and enable the front outboard passenger frontal airbag and knee airbag:

1. Turn the vehicle off.
2. Remove any additional material from the seat, such as blankets, cushions, seat covers, seat heaters, or seat massagers.
3. Place the seatback in the fully upright position.
4. Have the person sit upright in the seat, centered on the seat cushion, with legs comfortably extended.
5. If the shoulder portion of the belt is pulled out all the way, the child restraint locking feature will be engaged. This may unintentionally cause the passenger sensing system to turn the airbag off for some adult-sized occupants. If this happens, unbuckle the belt, let the belt go back all the way, and then buckle the belt again without pulling the belt out all the way.
6. Restart the vehicle and have the person remain in this position for two to three minutes after the ON indicator is lit.

⚠ Warning

If the front outboard passenger airbag is turned off for an adult-sized occupant, the airbag will not be able to inflate and help protect that person in a crash, resulting in an increased risk of serious injury or even death. An adult-sized occupant should not ride in the front outboard passenger seat, if the passenger airbag OFF indicator is lit.

Additional Factors Affecting System Operation

Seat belts help keep the passenger in position on the seat during vehicle maneuvers and braking, which helps the passenger sensing system maintain the passenger airbag status. See “Seat Belts” and

"Child Restraints" in the Index for additional information about the importance of proper restraint use.

A thick layer of additional material, such as a blanket or cushion, or aftermarket equipment such as seat covers, seat heaters, and seat massagers can affect how well the passenger sensing system operates. We recommend that you not use seat covers or other aftermarket equipment except when approved by GM for your specific vehicle. See *Adding Equipment to the Airbag-Equipped Vehicle* ⇨ *68* for more information about modifications that can affect how the system operates.

The ON indicator may be lit if an object, such as a briefcase, handbag, grocery bag, laptop, or other electronic device, is put on an unoccupied seat. If this is not desired, remove the object from the seat.

⚠ Warning

Stowing articles under the passenger seat or between the passenger seat cushion and seatback may interfere with the proper operation of the passenger sensing system.

Servicing the Airbag-Equipped Vehicle

Airbags affect how the vehicle should be serviced. There are parts of the airbag system in several places around the vehicle. Your dealer and the service manual have information about servicing the vehicle and the airbag system. To purchase a service manual, see *Publication Ordering Information* ⇨ *333*.

⚠ Warning

For up to 10 seconds after the vehicle is turned off and the battery is disconnected, an airbag can still inflate during improper service. You can be injured if you are close to an airbag when it inflates. Avoid yellow connectors. They are probably part of the airbag system. Be sure to follow proper service procedures, and make sure the person performing work for you is qualified to do so.

Adding Equipment to the Airbag-Equipped Vehicle

Adding accessories that change the vehicle's frame, bumper system, height, front end, or side sheet metal may keep the airbag system from working properly.

The operation of the airbag system can also be affected by changing, including improperly repairing or replacing, any parts of the following:

- Airbag system, including airbag modules, front or side impact sensors, sensing and diagnostic module, or airbag wiring
- Front seats, including stitching, seams or zippers
- Seat belts
- Steering wheel, instrument panel, overhead console, ceiling trim, or pillar garnish trim
- Inner door seals, including speakers

Your dealer and the service manual have information about the location of the airbag modules and sensors, sensing and diagnostic module, and airbag wiring along with the proper replacement procedures.

In addition, the vehicle has a passenger sensing system for the front outboard passenger position, which includes sensors that are part of the passenger seat. The passenger sensing system may not operate properly if the original seat trim is replaced with non-GM covers, upholstery, or trim; or with GM covers, upholstery, or trim designed for a different vehicle. Any object, such as an aftermarket seat heater or a comfort-enhancing pad or device, installed under or on top of the seat fabric, could also interfere with the operation of the passenger sensing system. This could either prevent proper deployment of the passenger airbag(s) or prevent the passenger sensing system from properly turning off the passenger airbag(s). See *Passenger Sensing System* ⇨ *64*.

If the vehicle has rollover roof-rail airbags, see *Different Size Tires and Wheels* ⇨ *278* for additional important information.

If the vehicle must be modified because you have a disability and have questions about whether the modifications will affect the vehicle's airbag system, or if you have questions about whether the airbag system will be affected if the vehicle is modified for any other reason, call Customer Assistance. See *Customer Assistance Offices* ⇨ *326*.

Airbag System Check

The airbag system does not need regularly scheduled maintenance or replacement. Make sure the airbag readiness light is working. See *Airbag Readiness Light* ⇨ *108*.

Caution

If an airbag covering is damaged, opened, or broken, the airbag may not work properly. Do not open or break the airbag coverings. If there are any opened or broken airbag coverings, have the airbag covering and/or airbag module replaced. For the location of the airbags, see *Where Are the Airbags?* ⇨ *59*. See your dealer for service.

Replacing Airbag System Parts after a Crash

⚠ Warning

A crash can damage the airbag systems in the vehicle.
A damaged airbag system may not properly protect you and your passenger(s) in a crash, resulting in serious injury or even death. To help make sure the airbag systems are working properly after a crash, have them inspected and any necessary replacements made as soon as possible.

If an airbag inflates, you will need to replace airbag system parts. See your dealer for service.

If the airbag readiness light stays on after the vehicle is started or comes on when you are driving, the airbag system may not work properly. Have the vehicle serviced right away. See *Airbag Readiness Light* ⇨ *108*.

Child Restraints

Older Children

Older children who have outgrown booster seats should wear the vehicle's seat belts.

The manufacturer instructions that come with the booster seat state the weight and height limitations for that booster. Use a booster seat with a lap-shoulder belt until the child passes the fit test below:

- Sit all the way back on the seat. Do the knees bend at the seat edge? If yes, continue. If no, return to the booster seat.
- Buckle the lap-shoulder belt. Does the shoulder belt rest on the shoulder? If yes, continue. If no, try using the rear seat belt comfort guide, if available. See "Rear Seat Belt Comfort Guides" under *Lap-Shoulder Belt* ⇨ *53*. If a comfort guide is not available, or if the shoulder belt still does not rest on the shoulder, then return to the booster seat.
- Does the lap belt fit low and snug on the hips, touching the thighs? If yes, continue. If no, return to the booster seat.
- Can proper seat belt fit be maintained for the length of the trip? If yes, continue. If no, return to the booster seat.

Q: What is the proper way to wear seat belts?

A: An older child should wear a lap-shoulder belt and get the additional restraint a shoulder belt can provide. The shoulder belt should not cross the face or neck. The lap belt should fit snugly below the hips, just touching the top of the thighs. This applies belt force to the child's pelvic bones in a crash. It should never be worn over the abdomen, which could cause severe or even fatal internal injuries in a crash.

Also see “Rear Seat Belt Comfort Guides” under *Lap-Shoulder Belt* ⇨ *53*.

According to accident statistics, children are safer when properly restrained in a rear seating position.

In a crash, children who are not buckled up can strike other people who are buckled up, or can be thrown out of the vehicle. Older children need to use seat belts properly.

⚠ Warning

Never allow more than one child to wear the same seat belt. The seat belt cannot properly spread the impact forces. In a crash, they can be crushed together and seriously injured. A seat belt must be used by only one person at a time.

⚠ Warning

Never allow a child to wear the seat belt with the shoulder belt behind their back. A child can be seriously injured by not wearing the lap-shoulder belt properly. In a crash, the child would not be restrained by the shoulder belt. The child could move too far forward increasing the chance of head and neck injury. The child might also slide under the lap belt. The belt force would then be applied right on the abdomen. That could cause serious or fatal injuries. The shoulder belt should go over the shoulder and across the chest.

Infants and Young Children

Everyone in a vehicle needs protection! This includes infants and all other children. Neither the distance traveled nor the age and size of the traveler changes the need, for everyone, to use safety restraints. In fact, the law in every state in the United States and in every Canadian province says children up to some age must be restrained while in a vehicle.

⚠ Warning

Children can be seriously injured or strangled if a shoulder belt is wrapped around their neck. The shoulder belt can tighten but cannot be loosened if it is locked. The shoulder belt locks when it is pulled all the way out of the retractor. It unlocks when the shoulder belt is allowed to go all the way back into the retractor, but it cannot do this if it is wrapped around a child's neck. If the shoulder belt is locked and tightened around a child's neck, the only way to loosen the belt is to cut it.

Never leave children unattended in a vehicle and never allow children to play with the seat belts.

Every time infants and young children ride in vehicles, they should have the protection provided by appropriate child restraints. Neither the vehicle's seat belt system nor its airbag system is designed for them.

Children who are not restrained properly can strike other people, or can be thrown out of the vehicle.

⚠ Warning

Never hold an infant or a child while riding in a vehicle. Due to crash forces, an infant or a child will become so heavy it is not possible to hold it during a crash. For example, in a crash at only 40 km/h (25 mph), a 5.5 kg (12 lb) infant will suddenly become a 110 kg (240 lb) force on a person's arms. An infant or child should be secured in an appropriate child restraint.

⚠ Warning

Children who are up against, or very close to, any airbag when it inflates can be seriously injured or killed. Never put a rear-facing child restraint in the front outboard seat. Secure a rear-facing child restraint in a rear seat. It is also better to secure a forward-facing child restraint in a rear seat. If you must secure a forward-facing child restraint in the front outboard seat, always move the front passenger seat as far back as it will go.

Child restraints are devices used to restrain, seat, or position children in the vehicle and are sometimes called child seats or car seats.

There are three basic types of child restraints:

- Forward-facing child restraints
- Rear-facing child restraints
- Belt-positioning booster seats

The proper child restraint for your child depends on their size, weight, and age, and also on whether the child restraint is compatible with the vehicle in which it will be used.

For each type of child restraint, there are many different models available. When purchasing a child restraint, be sure it is designed to be used in a motor vehicle. If it is, the child restraint will have a label saying that it meets federal motor vehicle safety standards.

The instruction manual that is provided with the child restraint states the weight and height limitations for that particular child restraint. In addition, there are many kinds of child restraints available for children with special needs.

⚠ Warning

To reduce the risk of neck and head injury in a crash, infants and toddlers should be secured in a rear-facing child restraint until age two, or until they reach the maximum height and weight limits of their child restraint.

⚠ Warning

A young child's hip bones are still so small that the vehicle seat belt may not remain low on the hip bones, as it should. Instead, it may settle up around the child's abdomen. In a crash, the belt would apply force on a body area that is unprotected by any bony structure. This alone could cause serious or fatal injuries. To reduce the risk of serious or fatal injuries during a crash, young children should always be secured in an appropriate child restraint.

Child Restraint Systems

Rear-Facing Infant Restraint

A rear-facing child restraint provides restraint with the seating surface against the back of the infant.

The harness system holds the infant in place and, in a crash, acts to keep the infant positioned in the restraint.

Forward-Facing Child Restraint

A forward-facing child restraint provides restraint for the child's body with the harness.

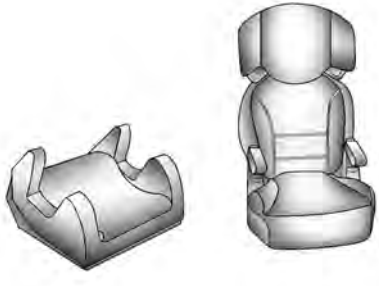

Booster Seats

A belt-positioning booster seat is used for children who have outgrown their forward-facing child restraint. Boosters are designed to improve the fit of the vehicle's seat belt system until the child is large enough for the vehicle seat belts to fit properly without a booster seat. See the seat belt fit test in *Older Children* ⇨ *70*.

Securing an Add-On Child Restraint in the Vehicle

⚠ Warning

A child can be seriously injured or killed in a crash if the child restraint is not properly secured in the vehicle. Secure the child restraint properly in the vehicle using the vehicle seat belt or LATCH system, following the instructions that came with that child restraint and the instructions in this manual.

To help reduce the chance of injury, the child restraint must be secured in the vehicle. Child restraints must be secured in vehicle seats by lap belts or the lap belt portion of a lap-shoulder belt, or by the LATCH system. See *Lower Anchors and Tethers for Children (LATCH System)* ⇨ *77* for more information. Children can be endangered in a crash if the child restraint is not properly secured in the vehicle.

When securing an add-on child restraint, refer to the following:

1. Instruction labels provided on the child restraint
2. Instruction manual provided with the child restraint
3. This vehicle owner's manual

The child restraint instructions are important, so if they are not available, obtain a replacement copy from the manufacturer.

Keep in mind that an unsecured child restraint can move around in a collision or sudden stop and injure people in the vehicle. Be sure to properly secure any child restraint in the vehicle — even when no child is in it.

In some areas Certified Child Passenger Safety Technicians (CPSTs) are available to inspect and demonstrate how to correctly use and install child restraints. In the U.S., refer to the National Highway Traffic Safety Administration (NHTSA) website to locate the nearest child safety seat

inspection station. For CPST availability in Canada, check with Transport Canada or the Provincial Ministry of Transportation office.

Securing the Child Within the Child Restraint

⚠ Warning

A child can be seriously injured or killed in a crash if the child is not properly secured in the child restraint. Secure the child properly following the instructions that came with that child restraint.

Where to Put the Restraint

According to accident statistics, children and infants are safer when properly restrained in an appropriate child restraint secured in a rear seating position.

Whenever possible, children aged 12 and under should be secured in a rear seating position.

Never put a rear-facing child restraint in the front. This is because the risk to the rear-facing child is so great if the airbag deploys.

⚠ Warning

A child in a rear-facing child restraint can be seriously injured or killed if the front passenger airbag inflates. This is because the back of the rear-facing child restraint would be very close to the inflating airbag. A child in a forward-facing child restraint can be seriously injured or killed if the front passenger airbag inflates and the passenger seat is in a forward position.

Even if the passenger sensing system has turned off the front passenger frontal airbag, no system is fail-safe. No one can guarantee that an airbag will not deploy under some unusual circumstance, even though it is turned off.

(Continued)

Warning (Continued)

Secure rear-facing child restraints in a rear seat, even if the airbag is off. If you secure a forward-facing child restraint in the front seat, always move the front passenger seat as far back as it will go. It is better to secure the child restraint in a rear seat.

See *Passenger Sensing System* ⇨ *64* for additional information.

When securing a child restraint with the seat belts in a rear seat position, study the instructions that came with the child restraint to make sure it is compatible with this vehicle.

Child restraints and booster seats vary considerably in size, and some may fit in certain seating positions better than others.

Depending on where you place the child restraint and the size of the child restraint, you may not be able to access adjacent seat belts or LATCH anchors for additional

passengers or child restraints. Adjacent seating positions should not be used if the child restraint prevents access to or interferes with the routing of the seat belt.

Wherever a child restraint is installed, be sure to follow the instructions that came with the child restraint and secure the child restraint properly.

Keep in mind that an unsecured child restraint can move around in a collision or sudden stop and injure people in the vehicle. Be sure to properly secure any child restraint in the vehicle — even when no child is in it.

Lower Anchors and Tethers for Children (LATCH System)

The LATCH system secures a child restraint during driving or in a crash. LATCH attachments on the child restraint are used to attach the child restraint to the anchors in the vehicle. The LATCH system is designed to make installation of a child restraint easier.

In order to use the LATCH system in your vehicle, you need a child restraint that has LATCH attachments. LATCH-compatible rear-facing and forward-facing child seats can be properly installed using either the LATCH anchors or the vehicle's seat belts. Do not use both the seat belts and the LATCH anchorage system to secure a rear-facing or forward-facing child seat.

Booster seats use the vehicle's seat belts to secure the child and the booster seat. If the manufacturer recommends that the booster seat be secured with the LATCH system, this can be done as long as the booster seat can be positioned properly and there is no interference with the proper positioning of the lap-shoulder belt on the child.

Make sure to follow the instructions that came with the child restraint, and also the instructions in this manual.

When installing a child restraint with a top tether, you must also use either the lower anchors or the seat belts to properly secure the child restraint. A child restraint must never be installed using only the top tether and anchor.

For a forward-facing 5-pt harness child restraint where the combined weight of the child and restraint are up to 29.5 kg (65 lb), use either the lower LATCH anchorages with the top tether anchorage, or the seat belt with the top tether anchorage. Where the combined weight of the child and restraint are greater than 29.5 kg (65 lb), use the seat belt with the top tether anchorage only.

Recommended Methods for Attaching Child Restraints

Restraint Type	Combined Weight of the Child + Child Restraint	Use Only Approved Attachment Methods Shown with an X			
		LATCH – Lower Anchors Only	**Seat Belt Only**	**LATCH** – Lower Anchors and Top Tether Anchor	**Seat Belt and Top Tether Anchor**
Rear-Facing Child Restraint	Up to 29.5 kg (65 lb)	**X**	**X**		
Rear-Facing Child Restraint	Greater than 29.5 kg (65 lb)		**X**		
Forward-Facing Child Restraint	Up to 29.5 kg (65 lb)			**X**	**X**
Forward-Facing Child Restraint	Greater than 29.5 kg (65 lb)				**X**

See *Securing Child Restraints (With the Seat Belt in the Rear Seat)* ⇨ *83* or *Securing Child Restraints (With the Seat Belt in the Front Seat)* ⇨ *85*.

Child restraints built after March 2014 will be labeled with the specific child weight up to which the LATCH system can be used to install the restraint.

The following explains how to attach a child restraint with these attachments in the vehicle.

Not all vehicle seating positions have lower anchors. In this case, the seat belt must be used (with top tether where available) to secure the child restraint. See *Securing Child Restraints (With the Seat Belt in the Rear Seat)* ⇨ *83* or *Securing Child Restraints (With the Seat Belt in the Front Seat)* ⇨ *85*.

In Canada, the law requires that forward-facing child restraints have a top tether, and that the tether be attached. Convertible models do not have top tether anchors to secure a child restraint. If a national or local

law requires that the top tether be anchored, do not use a child restraint in this vehicle because a top tether cannot be properly anchored.

Lower Anchors

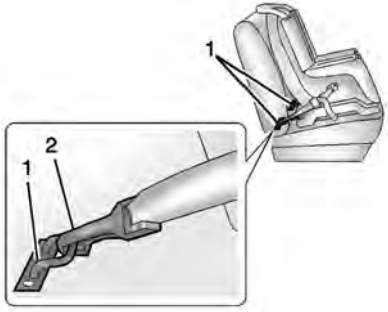

Lower anchors (1) are metal bars built into the vehicle. There are two lower anchors for each LATCH seating position that will accommodate a child restraint with lower attachments (2).

Top Tether Anchor

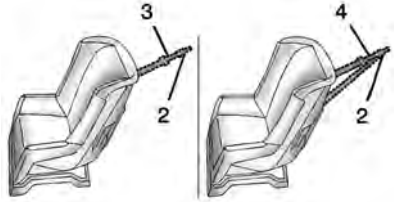

A top tether (3,4) is used to secure the top of the child restraint to the vehicle. A top tether anchor is built into the vehicle. The top tether attachment hook (2) on the child restraint connects to the top tether anchor in the vehicle in order to reduce the forward movement and rotation of the child restraint during driving or in a crash.

The child restraint may have a single tether (3) or a dual tether (4). Either will have a single attachment hook (2) to secure the top tether to the anchor.

Some child restraints that have a top tether are designed for use with or without the top tether being attached. Others require the top tether always to be attached. In Canada, the law requires that forward-facing child restraints have a top tether, and that the tether be attached. Be sure to read and follow the instructions for the child restraint.

Lower Anchor and Top Tether Anchor Locations

Rear Seat - Coupe Model

: Seating positions with top tether anchors.

: Seating positions with two lower anchors.

Rear Seat - Convertible Model

: Seating positions with two lower anchors.

Lower Anchors

To assist in locating the lower anchors, each seating position with lower anchors has two labels, near the crease between the seatback and the seat cushion.

The outboard lower anchors are behind the vertical openings in the seat trim.

Top Tether Anchors

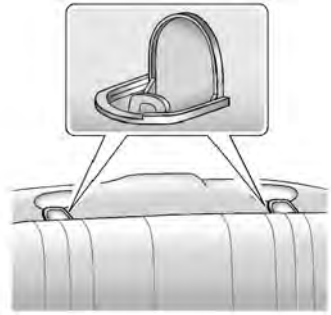

On coupe models, the top tether anchors are on the rear seatback filler panel.

To assist in locating the top tether anchors, the top tether anchor symbol is on the cover of the anchor.

Convertible models do not have top tether anchors to be used to secure a child restraint in any seating position.

Be sure to use an anchor located directly behind the seating position where the child restraint will be placed.

Do not secure a child restraint in a position without a top tether anchor if a national or local law requires that the top tether be attached, or if the instructions that come with the child restraint say that the top tether must be attached.

According to accident statistics, children and infants are safer when properly restrained in a child restraint system or infant restraint system secured in a rear seating position. See *Where to Put the Restraint* ⇨ *76* for additional information.

Securing a Child Restraint Designed for the LATCH System

⚠ Warning

A child could be seriously injured or killed in a crash if the child restraint is not properly attached to the vehicle using either the LATCH anchors or the vehicle seat belt. Follow the instructions that came with the child restraint and the instructions in this manual.

⚠ Warning

To reduce the risk of serious or fatal injuries during a crash, do not attach more than one child restraint to a single anchor. Attaching more than one child restraint to a single anchor could cause the anchor or attachment

(Continued)

Warning (Continued)

to come loose or even break during a crash. A child or others could be injured.

⚠ Warning

Children can be seriously injured or strangled if a shoulder belt is wrapped around their neck. The shoulder belt can tighten but cannot be loosened if it is locked. The shoulder belt locks when it is pulled all the way out of the retractor. It unlocks when the shoulder belt is allowed to go all the way back into the retractor, but it cannot do this if it is wrapped around a child's neck. If the shoulder belt is locked and tightened around a child's neck, the only way to loosen the belt is to cut it.

(Continued)

Warning (Continued)

Buckle any unused seat belts behind the child restraint so children cannot reach them. Pull the shoulder belt all the way out of the retractor to set the lock, and tighten the belt behind the child restraint after the child restraint has been installed.

Caution

Do not let the LATCH attachments rub against the vehicle's seat belts. This may damage these parts. If necessary, move buckled seat belts to avoid rubbing the LATCH attachments.

Do not fold the rear seatback when the seat is occupied. Do not fold the empty rear seat with a seat belt buckled. This could damage the seat belt or the seat.

(Continued)

Caution (Continued)

Unbuckle and return the seat belt to its stowed position, before folding the seat.

If you need to secure more than one child restraint in the rear seat, see *Where to Put the Restraint* ⇨ *76*.

1. Attach and tighten the lower attachments to the lower anchors. If the child restraint does not have lower attachments or the desired seating position does not have lower anchors, secure the child restraint with the top tether and the seat belt. Refer to the child restraint manufacturer instructions and the instructions in this manual.
   - 1.1. Find the lower anchors for the desired seating position.
   - 1.2. Put the child restraint on the seat.
   - 1.3. Attach and tighten the lower attachments on the child restraint to the lower anchors.
2. If the child restraint manufacturer recommends that the top tether be attached, attach and tighten the top tether to the top tether anchor, if equipped. Refer to the child restraint instructions and the following steps:
   - 2.1. Find the top tether anchor.
   - 2.2. Route, attach, and tighten the top tether according to the child restraint instructions and the following instructions:

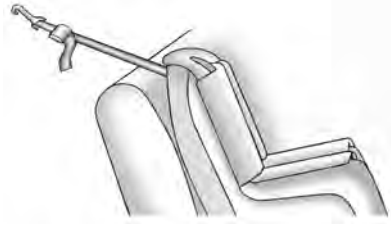

If the child restraint has a single tether, route the tether over the seatback.

If the child restraint has a dual tether, route the tether over the seatback.

3. Before placing a child in the child restraint, make sure it is securely held in place. To check, grasp the child restraint at the LATCH path and attempt to move it side to side and back and forth. There should be no more than 2.5 cm (1 in) of movement, for proper installation.

Replacing LATCH System Parts After a Crash

⚠ Warning

A crash can damage the LATCH system in the vehicle. A damaged LATCH system may not properly secure the child restraint, resulting in serious injury or even death in a crash. To help make sure the LATCH system is working properly after a crash, see your dealer to have the system inspected and any necessary replacements made as soon as possible.

If the vehicle has the LATCH system and it was being used during a crash, new LATCH system parts may be needed.

New parts and repairs may be necessary even if the LATCH system was not being used at the time of the crash.

Securing Child Restraints (With the Seat Belt in the Rear Seat)

When securing a child restraint in a rear seating position, study the instructions that came with the child restraint to make sure it is compatible with this vehicle.

If the child restraint has the LATCH system, see *Lower Anchors and Tethers for Children (LATCH System)* ⇨ *77* for how and where to install your child restraint using LATCH. If a child restraint is secured in the vehicle using a seat belt and it uses a top tether, see *Lower Anchors and Tethers for Children (LATCH System)* ⇨ *77* for top tether anchor locations.

Do not secure a child restraint in a position without a top tether anchor if a national or local law requires that the top tether be anchored, or if the instructions that come with the child restraint say that the top tether must be anchored.

In Canada, the law requires that forward-facing child restraints have a top tether, and that the tether be attached.

If the child restraint or vehicle seat position does not have the LATCH system, you will be using the seat belt to secure the child restraint. Be sure to follow the instructions that came with the child restraint.

If more than one child restraint needs to be installed in the rear seat, be sure to read *Where to Put the Restraint* ⇨ *76*.

1. Put the child restraint on the seat.
2. Pick up the latch plate, and run the lap and shoulder portions of the vehicle seat belt through or around the child restraint. The child restraint instructions will show you how.

3. Push the latch plate into the buckle until it clicks.

   Position the release button on the buckle, away from the child restraint, so that the seat belt could be quickly unbuckled if necessary.

4. Pull the shoulder belt all the way out of the retractor to set the lock. When the retractor lock is set, the belt can be tightened but not pulled out of the retractor.

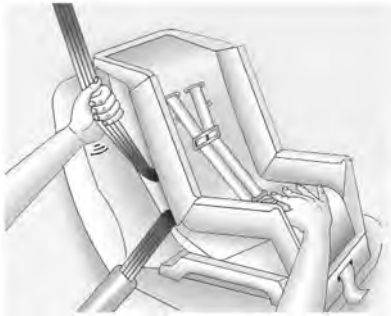

5. To tighten the belt, push down on the child restraint, pull the shoulder portion of the belt to tighten the lap portion of the belt, and feed the shoulder belt back into the retractor. When installing a forward-facing child restraint, it may be helpful to use your knee to push down on the child restraint as you tighten the belt.

   Try to pull the belt out of the retractor to make sure the retractor is locked. If the retractor is not locked, repeat Steps 4 and 5.

6. If the child restraint has a top tether, follow the child restraint manufacturer's instructions regarding the use of the top tether. See *Lower Anchors and Tethers for Children (LATCH System)* ⇨ *77*.

7. Before placing a child in the child restraint, make sure it is securely held in place. To check, grasp the child restraint at the seat belt path and attempt to move it side to side and back and forth. When the child restraint is properly installed, there should be no more than 2.5 cm (1 in) of movement.

To remove the child restraint, unbuckle the vehicle seat belt and let it return to the stowed position. If the top tether is attached to a top tether anchor, disconnect it.

Securing Child Restraints (With the Seat Belt in the Front Seat)

This vehicle has airbags. A rear seat is a safer place to secure a forward-facing child restraint. See *Where to Put the Restraint* ⇨ *76*.

In addition, the vehicle has a passenger sensing system which is designed to turn off the front outboard passenger frontal airbag and knee airbag under certain conditions. See *Passenger Sensing System* ⇨ *64* and *Passenger Airbag Status Indicator* ⇨ *108* for more information, including important safety information.

Never put a rear-facing child seat in the front. This is because the risk to the rear-facing child is so great if the airbag deploys.

⚠ Warning

A child in a rear-facing child restraint can be seriously injured or killed if the front outboard passenger frontal airbag inflates. This is because the back of the rear-facing child restraint would be very close to the inflating airbag. A child in a forward-facing child restraint can be seriously injured or killed if the front outboard passenger frontal airbag inflates and the passenger seat is in a forward position.

Even if the passenger sensing system has turned off the front outboard passenger airbag(s), no system is fail-safe. No one can guarantee that an airbag will not deploy under some unusual circumstance, even though the airbag(s) are off.

Secure rear-facing child restraints in a rear seat, even if the airbag(s) are off. If you secure a

(Continued)

Warning (Continued)

forward-facing child restraint in the front outboard passenger seat, always move the seat as far back as it will go. It is better to secure the child restraint in a rear seat.

See *Passenger Sensing System* ⇨ *64* for additional information.

If the child restraint uses a top tether, see *Lower Anchors and Tethers for Children (LATCH System)* ⇨ *77* for top tether anchor locations.

Do not secure a child seat in a position without a top tether anchor if a national or local law requires that the top tether be anchored, or if the instructions that come with the child restraint say that the top tether must be anchored.

In Canada, the law requires that forward-facing child restraints have a top tether, and that the tether be attached.

When using the lap-shoulder belt to secure the child restraint in this position, follow the instructions that came with the child restraint and the following instructions:

1. Move the seat as far back as it will go before securing the forward-facing child restraint. Move the seat upward or the seatback to an upright position, if needed, to get a tight installation of the child restraint.

   When the passenger sensing system has turned off the front outboard passenger frontal airbag and knee airbag, the OFF indicator on the passenger airbag status indicator should light and stay lit when you start the vehicle. See *Passenger Airbag Status Indicator* ⇨ *108*.

2. Put the child restraint on the seat.

3. Pick up the latch plate, and run the lap and shoulder portions of the vehicle seat belt through

or around the child restraint. The child restraint instructions will show you how.

4. Push the latch plate into the buckle until it clicks.

   Position the release button on the buckle, away from the child restraint, so that the seat belt could be quickly unbuckled if necessary.

5. Pull the shoulder belt all the way out of the retractor to set the lock. When the retractor lock is set, the belt can be tightened but not pulled out of the retractor.

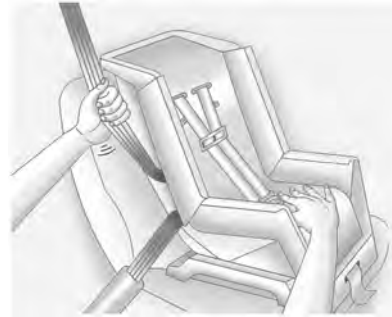

6. To tighten the belt, push down on the child restraint, pull the shoulder portion of the belt to tighten the lap portion of the belt, and feed the shoulder belt back into the retractor. When installing a forward-facing child restraint, it may be helpful to use your knee to push down on the child restraint as you tighten the belt.

   Try to pull the belt out of the retractor to make sure the retractor is locked. If the retractor is not locked, repeat Steps 5 and 6.

7. Before placing a child in the child restraint, make sure it is securely held in place. To check, grasp the child restraint at the seat belt path and attempt to move it side to side and back and forth. When the child restraint is properly installed, there should be no more than 2.5 cm (1 in) of movement.

If the airbags are off, the OFF indicator in the passenger airbag status indicator will come on and stay on when the vehicle is started.

If a child restraint has been installed and the ON indicator is lit, see “If the On Indicator Is Lit for a Child Restraint” under *Passenger Sensing System* ⇨ *64*.

To remove the child restraint, unbuckle the vehicle seat belt and let it return to the stowed position.

Storage

Storage Compartments
Storage Compartments 89
Glove Box 89
Rear Storage 89
Center Console Storage 90

Additional Storage Features
Convenience Net 90

Storage Compartments

⚠ Warning

Do not store heavy or sharp objects in storage compartments. In a crash, these objects may cause the cover to open and could result in injury.

Glove Box

Open the glove box by lifting up on the lever. Use the key to lock and unlock the glove box.

Rear Storage

Rear Seat Trunk Access (Coupe)

If equipped, there is access to the trunk from inside of the vehicle.

Pull the loop on the center of the rear seat back. The rear seat back will fold down.

Rear Trunk Partition

If equipped with a convertible top, there is a trunk partition to keep cargo from getting in the way of the convertible top. The trunk partition must be in place for the convertible top to move. If the trunk partition is not properly in place, a message will display and a chime sounds.

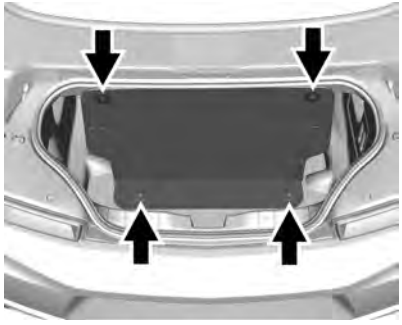

The trunk partition can be attached or detached to upper trunk brackets. With the convertible top up, the trunk partition can be unsnapped and laid flat.

Pull the partition up and snap it into place on both sides and the bottom of the trunk.

Center Console Storage

Press to open. There are two USB ports and an auxiliary jack inside. See the infotainment manual.

Additional Storage Features

Convenience Net

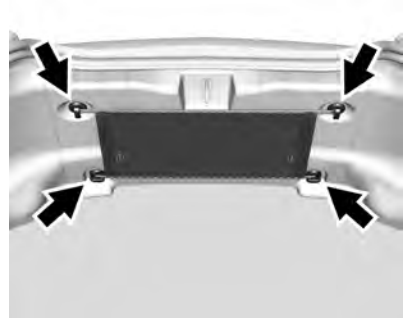

For vehicles with a convenience net inside the trunk, it can be used to secure loose items.

Instruments and Controls

Controls

Steering Wheel Adjustment 92
Steering Wheel Controls 92
Heated Steering Wheel 92
Horn 92
Windshield Wiper/Washer 92
Compass 94
Clock 94
Power Outlets 94
Wireless Charging 95

Warning Lights, Gauges, and Indicators

Warning Lights, Gauges, and Indicators 97
Instrument Cluster 98
Speedometer 102
Odometer 102
Trip Odometer 102
Tachometer 102
Fuel Gauge 103
Boost Gauge (Uplevel Cluster Only) 104
Engine Oil Pressure Gauge (Uplevel Cluster Only) 105
Engine Coolant Temperature Gauge 106
Voltmeter Gauge (Uplevel Cluster Only) 107
Seat Belt Reminders 107
Airbag Readiness Light 108
Passenger Airbag Status Indicator 108
Charging System Light 109
Malfunction Indicator Lamp ... 110
Brake System Warning Light 112
Electric Parking Brake Light 112
Service Electric Parking Brake Light 113
Antilock Brake System (ABS) Warning Light 113
Vehicle Ahead Indicator 113
Traction Off Light 114
StabiliTrak OFF Light 114
Traction Control System (TCS)/ StabiliTrak Light 114
Tire Pressure Light 115
Engine Oil Pressure Light 115
Low Fuel Warning Light 115
Security Light 116
High-Beam On Light 116
Lamps On Reminder 116
Cruise Control Light 116
Door Ajar Light 116

Information Displays

Driver Information Center (DIC) 117
Head-Up Display (HUD) 120

Vehicle Messages

Vehicle Messages 124
Engine Power Messages 124
Vehicle Speed Messages 124

Vehicle Personalization

Vehicle Personalization 125

Controls

Steering Wheel Adjustment

To adjust the tilt and telescoping steering wheel:

1. Pull the lever down.
2. Move the steering wheel up or down.
3. Pull or push the steering wheel closer or away from you.
4. Pull the lever up to lock the steering wheel in place.

Do not adjust the steering wheel while driving.

Steering Wheel Controls

The infotainment system can be operated by using the steering wheel controls. See “Steering Wheel Controls” in the infotainment manual.

Heated Steering Wheel

: If equipped, press to turn the heated steering wheel on or off. A light next to the button displays when the feature is turned on.

The steering wheel takes about three minutes to be fully heated.

Horn

Press on the steering wheel pad to sound the horn.

Windshield Wiper/Washer

The windshield wiper/washer lever is on the right side of the steering column. With the ignition on or in ACC/ACCESSORY, move the windshield wiper lever to select the wiper speed.

HI : Use for fast wipes.

LO : Use for slow wipes.

INT : Move the lever up to INT for intermittent wipes, then turn the INT band up for more frequent wipes or down for less frequent wipes.

OFF : Use to turn the wipers off.

1X : For a single wipe, briefly move the wiper lever down. For several wipes, hold the wiper lever down.

: Pull the windshield wiper lever toward you to spray windshield washer fluid and activate the wipers. The wipers will continue until the lever is released or the maximum wash time is reached. When the windshield wiper lever is released, additional wipes may occur depending on how long the windshield washer had been activated. See *Washer Fluid* ⇨ *243* for information on filling the windshield washer fluid reservoir.

Clear snow and ice from the wiper blades and windshield before using them. If frozen to the windshield, carefully loosen or thaw them. Damaged blades should be replaced. See *Wiper Blade Replacement* ⇨ *248*.

Heavy snow or ice can overload the wiper motor.

⚠ Warning

In freezing weather, do not use the washer until the windshield is warmed. Otherwise the washer fluid can form ice on the windshield, blocking your vision.

⚠ Warning

Before driving the vehicle, always clear snow and ice from the hood, windshield, roof, and rear of the vehicle, including all lamps and windows. Reduced visibility from snow and ice buildup could lead to a crash.

Wiper Parking

If the ignition is turned off while the wipers are on LO, HI, or INT, they will immediately stop.

If the windshield wiper lever is then moved to OFF before the driver door is opened or within 10 minutes, the wipers will restart and move to the base of the windshield.

If the ignition is turned off while the wipers are performing wipes due to windshield washing, the wipers continue to run until they reach the base of the windshield.

Compass

The vehicle has a compass display in the Driver Information Center (DIC). The compass receives its heading and other information from the Global Positioning System (GPS) antenna, StabiliTrak/ Electronic Stability Control (ESC), and vehicle speed information.

Avoid covering the GPS antenna, located on the roof, for long periods of time with objects that may interfere with the antenna's ability to receive a satellite signal. The compass system is designed to operate for a certain number of miles or degrees of turn before needing a signal from the GPS satellites. When the compass display shows CAL, drive the vehicle for a short distance in an open area where it can receive a GPS signal. The compass system will automatically determine when the GPS signal is restored and provide a heading again.

Clock

The time and date for the clock can be set using the infotainment system. See “Time/Date” in “System” under “Settings” in the infotainment manual.

Power Outlets

The vehicle has an accessory power outlet on the center floor console in front of the cupholders. It can be used to plug in electrical equipment, such as a cell phone or an MP3 player.

The accessory power outlet does not work when the ignition is turned off and the driver door is opened. This helps to preserve the battery life of the vehicle.

Certain power accessory plugs may not be compatible with the accessory power outlet and could overload vehicle and adapter fuses. If a problem is experienced, see your dealer.

Caution

Adding any electrical equipment to the vehicle may damage it or keep other components from working as they should. The repairs would not be covered by the vehicle warranty. Do not use equipment exceeding maximum amperage rating of 15 amperes. Check with your dealer before adding electrical equipment.

When adding electrical equipment, be sure to follow the proper installation instructions included with the equipment. See *Add-On Electrical Equipment* ⇨ *218*.

Caution

Hanging heavy equipment from the power outlet can cause damage not covered by the vehicle warranty. The power

(Continued)

Caution (Continued)

outlets are designed for accessory power plugs only, such as cell phone charge cords.

Wireless Charging

If equipped, the vehicle has wireless charging in the storage bin at the back of the floor console. The system operates at 145 kHz and wirelessly charges one Qi compatible smartphone. The power output of the system is capable of charging at a rate up to 1 amp (5W), as requested by the compatible smartphone. See *Radio Frequency Statement* ⇨ *334*.

⚠ Warning

Wireless charging can affect the operation of an implanted pacemaker or other medical devices. If you have one, it is

(Continued)

Warning (Continued)

recommended to consult with your doctor before using the wireless charging system.

The vehicle must be on, in ACC/ACCESSORY, or Retained Accessory Power (RAP) must be active. The wireless charging feature may not correctly indicate charging when the vehicle is in RAP. See *Retained Accessory Power (RAP)* ⇨ *179*.

The operating temperature is −20 °C (−4 °F) to 60 °C (140 °F) for the charging system and 0 °C (32 °F) to 35 °C (95 °F) for the smartphone.

⚠ Warning

Remove all objects from the charging pad before charging your compatible smartphone. Objects, such as coins, keys, rings, paper clips, or cards,

(Continued)

Warning (Continued)

between the smartphone and charging pad will become very hot. On the rare occasion that the charging system does not detect an object, and the object gets wedged between the smartphone and charger, remove the smartphone and allow the object to cool before removing it from the charging pad, to prevent burns.

To charge a compatible smartphone:

1. Remove all objects from the charging pad. The system may not charge if there are any objects between the smartphone and charging pad.
2. Place the smartphone face up on the charging pad.

   To maximize the charge rate, ensure the smartphone is fully seated and centered in the holder with nothing under it. A thick smartphone case may prevent the wireless charger from working, or may reduce the charging performance. See your dealer for additional information.
3. The ϟ will appear on the ☎ on the infotainment display. This indicates that the smartphone is properly positioned and charging. If a smartphone is placed on the charging pad and ϟ does not appear, remove the smartphone from the pad, turn it 180 degrees, and wait three seconds before placing/aligning the smartphone on the pad again.

   The smartphone may become warm during charging. This is normal. In warmer temperatures, the speed of charging may be reduced.

Software Acknowledgements

Certain Wireless Charging Module product from LG Electronics, Inc. ("LGE") contains the open source software detailed below. Refer to the indicated open source licenses (as are included following this notice) for the terms and conditions of their use.

OSS Notice Information

To obtain the source code that is contained in this product, please visit http://opensource.lge.com. In addition to the source code, all referred license terms, warranty disclaimers and copyright notices are available for download. LG Electronics will also provide open source code to you on CD-ROM for a charge covering the cost of performing such distribution (such as the cost of media, shipping, and handling) upon email request to opensource@lge.com. This offer is valid for three (3) years from the date on which you purchased the product.

Freescale-WCT library

Copyright (c) 2012-2014 Freescale Semiconductor, Inc.. All rights reserved.

1. Redistributions of source code must retain the above copyright notice, this list of conditions and the following disclaimer.
2. Redistributions in binary form must reproduce the above copyright notice, this list of conditions and the following disclaimer in the documentation and/or other materials provided with the distribution.
3. Neither the name of the copyright holder nor the names of its contributors may be used to endorse or promote products

derived from this software without specific prior written permission.

THIS SOFTWARE IS PROVIDED BY THE COPYRIGHT HOLDERS AND CONTRIBUTORS "AS IS" AND ANY EXPRESS OR IMPLIED WARRANTIES, INCLUDING, BUT NOT LIMITED TO, THE IMPLIED WARRANTIES OF MERCHANTABILITY AND FITNESS FOR A PARTICULAR PURPOSE ARE DISCLAIMED. IN NO EVENT SHALL THE COPYRIGHT HOLDER OR CONTRIBUTORS BE LIABLE FOR ANY DIRECT, INDIRECT, INCIDENTAL, SPECIAL, EXEMPLARY, OR CONSEQUENTIAL DAMAGES (INCLUDING, BUT NOT LIMITED TO, PROCUREMENT OF SUBSTITUTE GOODS OR SERVICES; LOSS OF USE, DATA, OR PROFITS; OR BUSINESS INTERRUPTION) HOWEVER CAUSED AND ON ANY THEORY OF LIABILITY, WHETHER IN CONTRACT, STRICT LIABILITY, OR TORT (INCLUDING NEGLIGENCE OR OTHERWISE) ARISING IN ANY WAY OUT OF THE USE OF THIS SOFTWARE, EVEN IF ADVISED OF THE POSSIBILITY OF SUCH DAMAGE.

Warning Lights, Gauges, and Indicators

Warning lights and gauges can signal that something is wrong before it becomes serious enough to cause an expensive repair or replacement. Paying attention to the warning lights and gauges could prevent injury.

Some warning lights come on briefly when the engine is started to indicate they are working. When one of the warning lights comes on and stays on while driving, or when one of the gauges shows there may be a problem, check the section that explains what to do. Waiting to do repairs can be costly and even dangerous.

Instrument Cluster

Base Level English Shown, Metric Similar

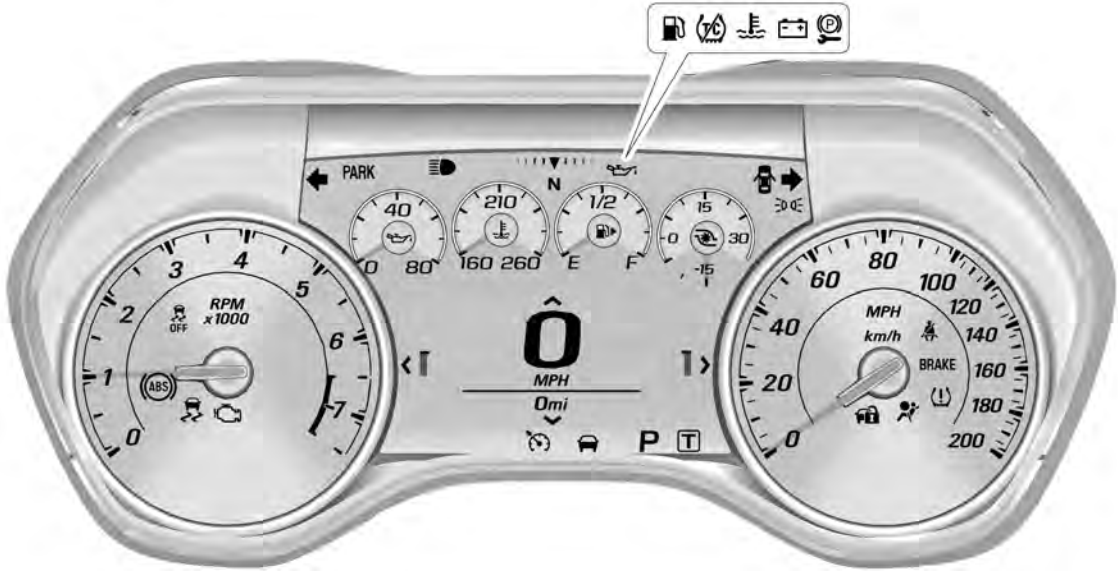

Uplevel English Standard Theme Shown, Metric Similar

See the Camaro High Performance supplement for more information.

Reconfigurable Instrument Cluster

To change the theme for the uplevel cluster:

1. Find the Options page in one of the interactive display zones on the cluster.
2. Press SEL to enter the Options menu.
3. Scroll down to highlight Display Theme, then press ▷ to enter the Display Theme menu.
4. Press SEL to select the desired cluster configuration.
5. Exit the Display Theme menu by pressing ◁.

Cluster Menu

There is an interactive display area in the center of the instrument cluster.

Use the right steering wheel control to open and scroll through the different items and displays.

Press ◁ to access the cluster applications. Use △ or ▽ to scroll through the list of applications. Press SEL to select the application from the list.

- Info. This is where you can view the Driver Information Center (DIC) displays. See *Driver Information Center (DIC)* ⇨ *117*.
- Performance (Uplevel Cluster)
- Audio (If Equipped)
- Phone (If Equipped)
- Navigation (If Equipped)
- Options

Performance (Uplevel Cluster)

Press SEL to enter the Performance menu. Use △ or ▽ to scroll through the available items.

Friction Bubble : A four quadrant visual display, indicative of the four corners of the car, with a “bubble” showing where the most inertia is being exerted on the vehicle.

Performance Timer : Press ▷ when Performance Timer is displayed to enter the menu. Use △ or ▽ to select an interval. Press SEL to save it. On the next acceleration, the performance time will record the time. To reset the timer, highlight Reset and press SEL.

G-Force : Gives the driver an indication of the vehicle performance in cornering. The G-force is displayed in the center of the DIC as a numerical value.

Lap Timer : Use to start, stop, or reset the lap timer. A stopwatch icon will be displayed when the lap timer is active. Press SEL while the Lap Timer page is active to start the timer. If the lap timer is active, pressing SEL on any page will stop the current lap timer and start a new lap. Also, pressing and holding SEL on any page will stop the lap timer.

Oil Temperature : Shows the current oil temperature in either degrees Celsius (°C) or degrees Fahrenheit (°F).

Oil Pressure : Shows the current oil pressure in either kilopascal (kPa) or in pounds per square inch (psi).

Battery Voltage : Displays the current battery voltage, if equipped. Battery voltage changes are normal while driving.

Transmission Fluid Temperature : Shows the temperature of the transmission fluid in either degrees Celsius (°C) or degrees Fahrenheit (°F).

Tire Temperature : If equipped, displays tire temperature status. Unknown may display if information is unavailable.

Tire temperature states:

- Cold — Drive with caution as tire performance may be degraded.
- Cool — Drive with caution as tire performance may be degraded.
- Normal — Tires are at normal driving temperature.
- Warm — Tires are ready for aggressive driving.
- Overheated — Tire temperature may be higher than optimal.

Audio

If equipped, while the audio app is open, use △ or ▽ to change the radio station or seek to the next or previous track, depending on the current audio source. Press ▷ to enter the Audio menu. In the Audio menu browse for music, select from the favorites, or change the audio source.

Phone

If equipped, press ▷ to enter the Phone menu. In the Phone menu, if there is no active phone call, view recent calls, or scroll through contacts. If there is an active call, mute or unmute the phone or switch to handset or hands-free operation.

Navigation

If equipped, press ▷ to enter the Navigation menu. If there is no active route, a compass will be displayed. If there is an active route, press SEL to cancel route guidance or turn the voice prompts on/off.

Options

Press SEL to enter the Options menu. Use △ or ▽ to scroll through items in the menu.

Units : Press ▷ while Units is displayed to enter the Units menu. Choose US or Metric units by pressing SEL while the desired item is highlighted.

Speed Warning : The Speed Warning display allows the driver to set a speed that they do not want to exceed. To set the Speed Warning, press ▷ when Speed Warning is displayed. Enable the speed warning and then use △ or ▽ to adjust the value. Press SEL to set the speed. Once the speed is set, this feature can be turned off by pressing SEL while viewing this page. If the selected speed limit is exceeded, a pop-up warning is displayed with a chime.

Display Theme (Uplevel) : Press SEL while Display Theme is highlighted to change the configuration of the uplevel cluster. See “Reconfigurable Instrument Cluster” earlier in this section.

Launch Control : If equipped, the Launch Control display allows the driver to adjust the parameters of the Launch Control System. See *Track Events and Competitive Driving* ⇨ *157*.

Head-Up Display (HUD) Rotation : If equipped, this feature allows for adjusting the angle of the HUD image. Press SEL on the steering wheel controls while Head-Up Display Rotation is highlighted to enter Adjust Mode. Press △ or ▽ to highlight OK, then press SEL to save the setting. Cancel can also be selected to cancel the setting. The vehicle must be on P (Park).

Info Pages : Press ▷ while Info Pages is highlighted to select the items to be displayed in the DIC info displays. See *Driver Information Center (DIC)* ⇨ *117*.

Software Info : Displays open source software information.

Speedometer

The speedometer shows the vehicle's speed in either kilometers per hour (km/h) or miles per hour (mph).

Odometer

The odometer shows how far the vehicle has been driven, in either kilometers or miles.

Trip Odometer

The trip odometer shows how far the vehicle has been driven since the trip odometer was last reset.

The trip odometer is accessed and reset through the Driver Information Center (DIC). See *Driver Information Center (DIC)* ⇨ *117*.

Tachometer

The tachometer displays the engine speed in revolutions per minute (rpm).

Caution

If the engine is operated with the rpm's in the warning area at the high end of the tachometer, the vehicle could be damaged, and the damage would not be covered by the vehicle warranty. Do not operate the engine with the rpm's in the warning area.

Fuel Gauge

Metric Base Level Cluster

English Base Level Cluster

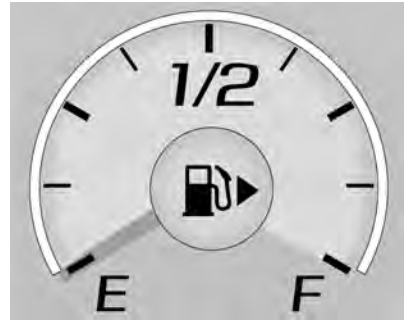

Uplevel Cluster

When the ignition is on, the fuel gauge indicates about how much fuel is left in the tank.

An arrow on the fuel gauge indicates the side of the vehicle the fuel door is on.

When the indicator nears empty, the low fuel light comes on. There is still a little fuel left, but the fuel tank should be filled soon.

Here are four things that some owners ask about. None of these show a problem with the fuel gauge:

- At the service station, the fuel pump shuts off before the gauge reads full.
- It takes a little more or less fuel to fill up than the gauge indicated. For example, the gauge indicated the tank was half full, but it actually took a little more or less than half the tank's capacity to fill the tank.
- The gauge moves a little while turning a corner or speeding up.
- The gauge takes a few seconds to stabilize after the ignition is turned on, and goes back to empty when the ignition is turned off.

Boost Gauge (Uplevel Cluster Only)

See the Camaro High Performance supplement for more information.

Metric

English

If equipped, this gauge indicates vacuum during light to moderate throttle and boost under heavier throttle.

It displays the air pressure level in the intake manifold before it enters the engine's combustion chamber.

The gauge is automatically centered at zero every time the engine is started. Actual vacuum or boost is displayed from this zero point. Changes in ambient pressure, such as driving in mountains and changing weather, will slightly change the zero reading.

Engine Oil Pressure Gauge (Uplevel Cluster Only)

Metric, Standard Theme Shown

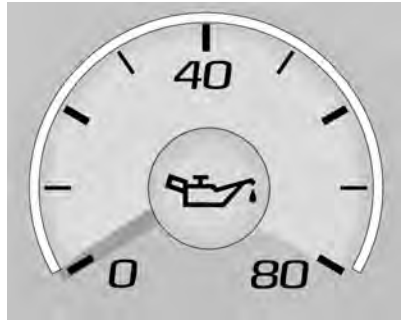

English, Standard Theme Shown

The engine oil pressure gauge shows the engine oil pressure in kPa (kilopascals) when the engine is running.

Oil pressure can vary with engine speed, outside temperature and oil viscosity.

On some models, the oil pump will vary engine oil pressure according to engine needs. Oil pressure may change quickly as the engine speed or load varies. This is normal.

If the oil pressure warning light or Driver Information Center (DIC) message indicates oil pressure outside the normal operating range, check the vehicle's oil as soon as possible. See *Engine Oil* ⇨ *229*.

Caution

Lack of proper engine oil maintenance can damage the engine. Driving with the engine oil low can also damage the engine. The repairs would not be covered by the vehicle warranty. Check the oil level as soon as possible. Add oil if required, but if the oil level is within the operating range and the oil pressure is still low, have the vehicle serviced. Always follow the maintenance schedule for changing engine oil.

Engine Coolant Temperature Gauge

Metric Base Level Cluster

English Base Level Cluster

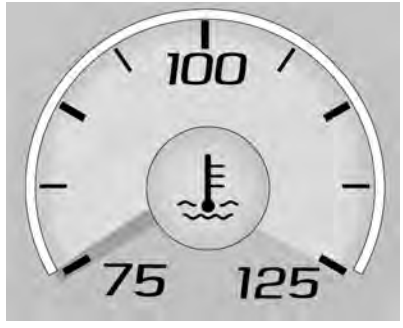

Metric Uplevel Cluster

English Uplevel Cluster

This gauge shows the engine coolant temperature.

If the gauge pointer moves to the high end, the engine is too hot.

This reading indicates the same thing as the warning light. It means that the engine coolant has overheated. If the vehicle has been operating under normal driving conditions, pull off the road, stop the vehicle, and turn off the engine as soon as possible. See *Engine Overheating* ⇨ *241* for more information.

Voltmeter Gauge (Uplevel Cluster Only)

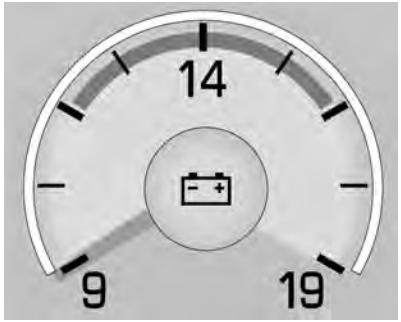

Standard Theme

When the ignition is on, this gauge indicates the battery voltage.

When the engine is running, this gauge shows the condition of the charging system. The gauge can transition from a higher to lower or a lower to higher reading. This is normal. If the vehicle is operating outside the normal operating range, the charging system light comes on. See *Charging System Light* ⇨ *109*.

Readings outside the normal operating range can also occur when a large number of electrical accessories are operating in the vehicle and the engine is left idling for an extended period. This condition is normal since the charging system is not able to provide full power at engine idle. As engine speeds are increased, this condition should correct itself as higher engine speeds allow the charging system to create maximum power.

The vehicle can only be driven for a short time with the readings outside the normal operating range. If the vehicle must be driven, turn off all accessories, such as the radio and air conditioner, and unplug all chargers and accessories.

Readings outside the normal operating range indicate a possible problem in the electrical system. Have the vehicle serviced as soon as possible.

Seat Belt Reminders

Driver Seat Belt Reminder Light

There is a driver seat belt reminder light on the instrument cluster.

When the vehicle is started, this light flashes and a chime may come on to remind the driver to fasten their seat belt. Then the light stays on solid until the belt is buckled. This cycle may continue several times if the driver remains or becomes unbuckled while the vehicle is moving.

If the driver seat belt is buckled, neither the light nor the chime comes on.

Passenger Seat Belt Reminder Light

There is a passenger seat belt reminder light near the passenger airbag status indicator. See *Passenger Sensing System* ⇨ *64*.

When the vehicle is started, this light flashes and a chime may come on to remind passengers to fasten their seat belt. Then the light stays on solid until the belt is buckled. This cycle continues several times if the passenger remains or becomes unbuckled while the vehicle is moving.

If the passenger seat belt is buckled, neither the chime nor the light comes on.

The front passenger seat belt reminder light and chime may turn on if an object is put on the seat such as a briefcase, handbag, grocery bag, laptop, or other electronic device. To turn off the reminder light and/or chime, remove the object from the seat or buckle the seat belt.

Airbag Readiness Light

This light shows if there is an electrical problem with the airbag system. The system check includes the airbag sensor(s), the passenger sensing system, the pretensioners, the airbag modules, the wiring, and the crash sensing and diagnostic module. For more information on the airbag system, see *Airbag System* ⇨ *57*.

The airbag readiness light comes on for several seconds when the vehicle is started. If the light does not come on then, have it fixed immediately.

⚠ Warning

If the airbag readiness light stays on after the vehicle is started or comes on while driving, it means the airbag system might not be working properly. The airbags in the vehicle might not inflate in a crash, or they could even inflate without a crash. To help avoid injury, have the vehicle serviced right away.

If there is a problem with the airbag system, a Driver Information Center (DIC) message may also come on.

Passenger Airbag Status Indicator

The vehicle has a passenger sensing system. See *Passenger Sensing System* ⇨ *64* for important

safety information. The overhead console has a passenger airbag status indicator.

United States

Canada and Mexico

When the vehicle is started, the passenger airbag status indicator will light ON and OFF, or the symbols for on and off, for several seconds as a system check. Then, after several seconds, the status indicator will light either ON or OFF, or either the on or off symbol, to let you know the status of the front outboard passenger frontal airbag and knee airbag.

If the word ON or the on symbol is lit on the passenger airbag status indicator, it means that the front outboard passenger frontal airbag and knee airbag are allowed to inflate.

If the word OFF or the off symbol is lit on the passenger airbag status indicator, it means that the passenger sensing system has turned off the front outboard passenger frontal airbag and knee airbag.

If, after several seconds, both status indicator lights remain on, or if there are no lights at all, there may be a problem with the lights or the passenger sensing system. See your dealer for service.

⚠ Warning

If the airbag readiness light ever comes on and stays on, it means that something may be wrong with the airbag system. To help avoid injury to yourself or others,

(Continued)

Warning (Continued)

have the vehicle serviced right away. See *Airbag Readiness Light* ⇨ *108* for more information, including important safety information.

Charging System Light

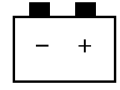

The charging system light comes on briefly when the ignition is turned on, but the engine is not running, as a check to show the light is working. The light turns off when the engine is started. If it does not, have the vehicle serviced by your dealer.

If the light stays on, or comes on while driving, there may be a problem with the electrical charging

system. Have it checked by your dealer. Driving while this light is on could drain the battery.

When this light comes on, the Driver Information Center (DIC) also displays a message.

If a short distance must be driven with the light on, be sure to turn off all accessories, such as the radio and air conditioner.

Malfunction Indicator Lamp

This light is part of the vehicle's emission control on-board diagnostic system. If this light is on while the engine is running, a malfunction has been detected and the vehicle may require service. The light should come on to show that it is working when the ignition is in Service Mode. See *Ignition Positions* ⇨ *175*.

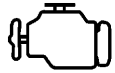

Malfunctions are often indicated by the system before any problem is noticeable. Being aware of the light and seeking service promptly when it comes on may prevent damage.

Caution

If the vehicle is driven continually with this light on, the emission control system may not work as well, the fuel economy may be lower, and the vehicle may not run smoothly. This could lead to costly repairs that might not be covered by the vehicle warranty.

Caution

Modifications to the engine, transmission, exhaust, intake, or fuel system, or the use of replacement tires that do not meet the original tire specifications, can cause this light to come on. This could lead to costly repairs not covered by the vehicle warranty. This could also affect the vehicle's ability to pass an Emissions Inspection/ Maintenance test. See *Accessories and Modifications* ⇨ *221*.

If the light is flashing : A malfunction has been detected that could damage the emission control system and increase vehicle emissions. Diagnosis and service may be required.

To help prevent damage, reduce vehicle speed and avoid hard accelerations and uphill grades.

If the light continues to flash, find a safe place to park. Turn the vehicle off and wait at least 10 seconds before restarting the engine. If the light is still flashing, follow the previous guidelines and see your dealer for service as soon as possible.

If the light is on steady : A malfunction has been detected. Diagnosis and service may be required.

Check the following:

- If fuel has been added to the vehicle using the capless funnel adapter, make sure that it has been removed. See “Filling the Tank with a Portable Gas Can” under *Filling the Tank* ⇨ *215*. The diagnostic system can detect if the adapter has been left installed in the vehicle, allowing fuel to evaporate into the atmosphere. A few driving trips with the adapter removed may turn off the light.
- Poor fuel quality can cause inefficient engine operation and poor driveability, which may go away once the engine is warmed up. If this occurs, change the fuel brand. It may require at least one full tank of the proper fuel to turn the light off. See *Recommended Fuel (3.6L V6 Engine)* ⇨ *213* or *Recommended Fuel (2.0L L4 Turbo Engine and 6.2L V8 Engine)* ⇨ *213* or *Recommended Fuel (6.2L V8 Supercharged Engine)* ⇨ *214*.

If the light remains on, see your dealer.

Emissions Inspection and Maintenance Programs

If the vehicle requires an Emissions Inspection/Maintenance test, the test equipment will likely connect to the vehicle's Data Link Connector (DLC).

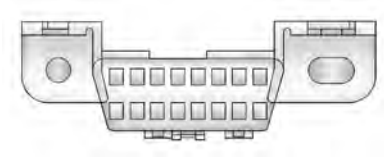

The DLC is under the instrument panel to the left of the steering wheel. Connecting devices that are not used to perform an Emissions Inspection/Maintenance test or to service the vehicle may affect vehicle operation. See *Add-On Electrical Equipment* ⇨ *218*. See your dealer if assistance is needed.

The vehicle may not pass inspection if:

- The light is on when the engine is running.
- The light does not come on when the ignition is in Service Mode.
- Critical emission control systems have not been completely diagnosed. If this happens, the vehicle would not be ready for inspection and might require several days of routine driving

before the system is ready for inspection. This can happen if the 12-volt battery has recently been replaced or run down, or if the vehicle has been recently serviced.

See your dealer if the vehicle will not pass or cannot be made ready for the test.

Brake System Warning Light

BRAKE

Metric **English**

This light should come on briefly when the vehicle is turned on. If it does not come on then, have it fixed so it will be ready to warn you if there is a problem.

If the light comes on and stays on at start up, there is a brake problem. Have the brake system inspected right away.

If the light comes on while driving, pull off the road and stop carefully. The brake pedal might be harder to push, or the brake pedal may go closer to the floor. It could take longer to stop. If the light is still on, have the vehicle towed for service. See *Towing the Vehicle* ⇨ *292*.

⚠ Warning

The brake system might not be working properly if the brake system warning light is on. Driving with the brake system warning light on can lead to a crash. If the light is still on after the vehicle has been pulled off the road and carefully stopped, have the vehicle towed for service.

Electric Parking Brake Light

PARK

Metric **English**

This light comes on when the parking brake is applied. If the light continues flashing after the parking brake is released, or while driving, there is a problem with the Electric Parking Brake system. A message may also display in the Driver Information Center (DIC).

If the light does not come on, or remains flashing, see your dealer.

Service Electric Parking Brake Light

The Service Electric Parking brake light should come on briefly when starting the vehicle. If it does not come on, have the vehicle serviced by your dealer.

If this light stays on, there is a problem with a system on the vehicle that is causing the parking brake system to work at a reduced level. The vehicle can still be driven, but should be taken to a dealer as soon as possible. See *Electric Parking Brake* ⇨ *192*. A message may also display in the Driver Information Center (DIC).

Antilock Brake System (ABS) Warning Light

This warning light should come on briefly when the vehicle is turned on. If the light does not come on, have it fixed so it will be ready to warn if there is a problem.

If the light comes on while driving, safely stop as soon as it is possible and turn off the vehicle. Then turn on the vehicle again to reset the system.

If the ABS warning light stays on, or comes on again while driving, the vehicle needs service. A chime may also sound when the light stays on.

If the ABS warning light is the only light on, the vehicle has regular brakes, but ABS is not functioning.

If both the ABS warning light and the brake system warning light are on, ABS is not functioning and there is a problem with the regular brakes. See your dealer for service.

See *Brake System Warning Light* ⇨ *112*.

Vehicle Ahead Indicator

If equipped, this indicator will display green when a vehicle is detected ahead and amber when you are following a vehicle ahead much too closely.

See *Forward Collision Alert (FCA) System* ⇨ *208*.

Traction Off Light

This light comes on briefly while starting the engine. If it does not, have the vehicle serviced by your dealer. If the system is working normally, the indicator light then turns off.

The traction off light comes on when the Traction Control System (TCS) has been turned off by pressing and releasing the TCS/StabiliTrak/ESC button.

This light and the StabiliTrak/ESC OFF light come on when StabiliTrak/ Electronic Stability Control (ESC) is turned off.

If the TCS is off, wheel spin is not limited. Adjust driving accordingly.

See *Traction Control/Electronic Stability Control* ⇨ *194*.

StabiliTrak OFF Light

This light comes on briefly while starting the engine. If it does not, have the vehicle serviced by your dealer.

This light comes on when the StabiliTrak/Electronic Stability Control (ESC) system is turned off. If StabiliTrak/ESC is off, the Traction Control System (TCS) is also off.

If StabiliTrak/ESC and TCS are off, the system does not assist in controlling the vehicle. Turn on the TCS and the StabiliTrak/ESC systems, and the warning light turns off.

See *Traction Control/Electronic Stability Control* ⇨ *194*.

Traction Control System (TCS)/StabiliTrak Light

This light comes on briefly when the engine is started.

If the light does not come on, have the vehicle serviced by your dealer. If the system is working normally, the indicator light turns off.

If the light is on and not flashing, the TCS and potentially the StabiliTrak/ ESC system have been disabled. A Driver Information Center (DIC) message may display. Check the DIC messages to determine which feature(s) is no longer functioning and whether the vehicle requires service.

If the light is on and flashing, the TCS and/or the StabiliTrak/ESC system is actively working.

See *Traction Control/Electronic Stability Control* ⇨ *194*.

Tire Pressure Light

For vehicles with the Tire Pressure Monitor System (TPMS), this light comes on briefly when the engine is started. It provides information about tire pressures and the TPMS.

When the Light Is On Steady

This indicates that one or more of the tires are significantly underinflated.

A Driver Information Center (DIC) tire pressure message may also display. Stop as soon as possible, and inflate the tires to the pressure value shown on the Tire and Loading Information label. See *Tire Pressure* ⇨ *267*.

When the Light Flashes First and Then Is On Steady

If the light flashes for about a minute and then stays on, there may be a problem with the TPMS. If the problem is not corrected, the light will come on at every ignition cycle. See *Tire Pressure Monitor Operation* ⇨ *270*.

Engine Oil Pressure Light

Caution

Lack of proper engine oil maintenance can damage the engine. Driving with the engine oil low can also damage the engine. The repairs would not be covered by the vehicle warranty. Check the oil level as soon as possible. Add oil if required, but if the oil level is within the operating range and the oil pressure is still low, have the vehicle serviced. Always follow the maintenance schedule for changing engine oil.

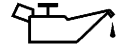

This light should come on briefly as the engine is started. If it does not come on, have the vehicle serviced by your dealer.

If the light comes on and stays on, it means that oil is not flowing through the engine properly. The vehicle could be low on oil and might have some other system problem. See your dealer.

Low Fuel Warning Light

This light is near the fuel gauge and comes on briefly when the ignition is turned on as a check to show it is working.

It also comes on when the fuel tank is low on fuel. The light turns off when fuel is added. If it does not, have the vehicle serviced.

Security Light

The security light should come on briefly as the engine is started. If it does not come on, have the vehicle serviced by your dealer. If the system is working normally, the indicator light turns off.

If the light stays on and the engine does not start, there could be a problem with the theft-deterrent system. See *Immobilizer Operation* ⇨ *25*.

High-Beam On Light

This light comes on when the high-beam headlamps are in use.

See *Headlamp High/Low-Beam Changer* ⇨ *130*.

Lamps On Reminder

This light comes on when the exterior lamps are in use, except when only the Daytime Running Lamps (DRL) are active. See *Exterior Lamp Controls* ⇨ *130*.

Cruise Control Light

The cruise control light is white when the cruise control is on and ready, and turns green when the cruise control is set and active.

The light goes out when the cruise control is turned off. See *Cruise Control* ⇨ *202*.

Door Ajar Light

This light comes on when a door is open or not securely latched. Before driving, check that all doors are properly closed.

Information Displays

Driver Information Center (DIC)

The DIC displays are shown in the center of the instrument cluster in the Info application. See *Instrument Cluster* ⇨ *98*. The Info application is only available when the ignition is on. The displays show the status of many vehicle systems. The controls for the DIC are on the right steering wheel control.

△ or ▽ : Press to move up or down in a list.

◁ or ▷ : Press ◁ to open application menus on the left. Press ▷ to open interaction menus on the right.

SEL : Press to select a menu item. Press and hold to reset values on certain screens.

DIC Info Pages

The following is the list of all possible DIC info displays. Depending on the vehicle, some may not be available. Some items may not be turned on by default but can be turned on through the Options app.

Current Speed : Displays the vehicle speed in either kilometers per hour (km/h) or miles per hour (mph).

Trip A or B/Average Fuel Economy : Trip displays the current distance traveled, in either kilometers (km) or miles (mi), since the trip odometer was last reset. The trip odometer can be reset by pressing and holding SEL while this display is active.

Average Fuel Economy displays the approximate average liters per 100 kilometers (L/100 km) or miles per gallon (mpg). This number is calculated based on the number of L/100 km (mpg) recorded since the last time this menu item was reset. This number reflects only the approximate average fuel economy that the vehicle has right now, and will change as driving conditions change. The Average Fuel Economy can be reset by pressing and holding SEL while this display is active.

Average Speed: Displays the average speed of the vehicle in kilometers per hour (km/h) or miles per hour (mph). This average is calculated based on the various vehicle speeds recorded since the last reset of this value. The average speed can be reset by pressing and holding SEL while this display is active.

Fuel Range (Base Cluster) : Fuel Range displays the approximate distance the vehicle can be driven without refueling. LOW will be displayed when the vehicle is low on fuel. The fuel range estimate is based on an average of the vehicle's fuel economy over recent driving history and the amount of fuel remaining in the fuel tank.

Fuel Information (Base Cluster) or Fuel Range/Instantaneous Fuel Economy (Uplevel Cluster) : Fuel Range displays the approximate distance the vehicle can be driven without refueling. LOW will be displayed when the vehicle is low on fuel. The fuel range estimate is based on an average of the vehicle's fuel economy over recent driving history and the amount of fuel remaining in the fuel tank.

Instantaneous Fuel Economy displays the current fuel economy in either liters per 100 kilometers (L/100 km) or miles per gallon (mpg). This number reflects only the approximate fuel economy that the vehicle has right now and changes frequently as driving conditions change.

This display may also show the number of cylinders the vehicle is running on. See *Active Fuel Management* ⇨ *181*.

Fuel Economy Last XXX : Displays the average fuel economy over a set number of kilometers or miles.

Average Speed : Displays the average speed of the vehicle in kilometers per hour (km/h) or miles per hour (mph). This average is calculated based on the various vehicle speeds recorded since the last reset of this value. The average speed can be reset by pressing and holding SEL while this display is active.

Timer : This display can be used as a timer. To start/stop the timer, press ▷ while this display is active and then SEL to start/stop the timer. The display will show the amount of time that has passed since the timer was last reset. To reset the timer to zero, press and hold SEL or use ▷ to access the menu while this display is active.

Oil Life : Displays an estimate of the oil's remaining useful life. If REMAINING OIL LIFE 99% is displayed, that means 99% of the current oil life remains.

When the remaining oil life is low, the CHANGE ENGINE OIL SOON message will appear on the display. The oil should be changed as soon as possible. See *Engine Oil* ⇨ *229*. In addition to the engine oil life system monitoring the oil life, additional maintenance is recommended. See *Maintenance Schedule* ⇨ *306*.

The Oil Life display must be reset after each oil change. It will not reset itself. Do not reset the Oil Life display accidentally at any time other than when the oil has just been changed. It cannot be reset accurately until the next oil change. To reset the engine oil life system, press and hold SEL for several

seconds while the Oil Life display is active. See *Engine Oil Life System* ⇨ *232*.

Air Filter Life : If equipped, shows an estimate of the engine air filter's remaining useful life and the state of the system. Engine Air Filter Life 95% means 95% of the current air filter life remains. Messages will display based on the engine air filter life and the state of the system. When the REPLACE AT NEXT OIL CHANGE message displays, the engine air filter should be replaced at the time of the next oil change. When the REPLACE NOW message displays, the engine air filter should be replaced as soon as possible.

The Air Filter Life display must be reset after the engine air filter replacement. To reset, see *Engine Air Filter Life System (2.0L LTG and 3.6L LGX Engines Only)* ⇨ *234*.

Engine Hours : If equipped, shows the total number of hours the engine has run.

Coolant Temperature : Displays the coolant temperature in either degrees Celsius (°C) or degrees Fahrenheit (°F).

Tire Pressure : Displays the approximate pressures of all four tires. Tire pressure is displayed in either kilopascal (kPa) or in pounds per square inch (psi). If the pressure is low, the value for that tire is shown in amber. See *Tire Pressure Monitor System* ⇨ *269* and *Tire Pressure Monitor Operation* ⇨ *270*.

Battery Voltage : Displays the current battery voltage. The battery voltage can fluctuate while viewing this information on the DIC. This is normal.

Speed Limit (Uplevel Cluster) : Displays sign information, which comes from a roadway database in the onboard navigation.

Oil Temperature (Base Cluster) : Shows the current oil temperature in either degrees Celsius (°C) or degrees Fahrenheit (°F). This display is available in the Performance app on the uplevel cluster.

Oil Pressure (Base Cluster) : Shows the current oil pressure in either kilopascal (kPa) or in pounds per square inch (psi). This display is available in the Performance app on the uplevel cluster.

Performance Timer (Base Cluster) : Press ▷ when Performance Timer is displayed to enter the menu. Press ▷ while Set Start Speed is highlighted then use △ or ▽ to enter the start speed. Press SEL to save it. Press ▷ while Set End Speed is highlighted then use △ or ▽ to enter the end speed. Press SEL to save it. After the start and end speeds have been entered, press ◁ to set the Sport display to the set speeds and the performance timer is ready to use. On the next acceleration, the performance time will record the time. To reset the

timer, highlight Reset on the performance timer menu and press SEL. This display is available in the Performance app on the uplevel cluster.

Lap Timer (Base Cluster) : Use to start, stop, or reset the lap timer. A stopwatch icon will be displayed when the lap timer is active. Press SEL while the Lap Timer page is active to start the timer. If the lamp timer is active, pressing SEL on any page will stop the current lap timer and start a new lap. Also, pressing and holding SEL on any page will stop the lap timer. This display is available in the Performance app on the uplevel cluster.

G-Force (Base Cluster) : Gives the driver an indication of the vehicle performance in cornering. The G-force is displayed in the center of the DIC as a numerical value. This display is available in the Performance app on the uplevel cluster.

Transmission Fluid Temperature (Base Cluster) : Shows the temperature of the transmission fluid in either degrees Celsius (°C) or degrees Fahrenheit (°F). This display is available in the Performance app on the uplevel cluster.

Blank : Shows no information.

Head-Up Display (HUD)

⚠ Warning

If the HUD image is too bright or too high in your field of view, it may take you more time to see things you need to see when it is dark outside. Be sure to keep the HUD image dim and placed low in your field of view.

If equipped with HUD, some information concerning the operation of the vehicle is projected onto the windshield.

The HUD information appears as an image focused out toward the front of the vehicle.

Caution

If you try to use the HUD image as a parking aid, you may misjudge the distance and damage your vehicle. Do not use the HUD image as a parking aid.

The HUD information can be displayed in various languages. The speedometer reading and other numerical values can be displayed in either English or metric units.

The language of the HUD information displayed can be changed. The speedometer reading and other numerical values can be displayed in either English or metric units.

The language selection is changed through the radio and the units of measurement is changed through the instrument cluster. See

"Settings" in the Infotainment Manual and "Options" under *Instrument Cluster* ⇨ *98*.

HUD Display on the Windshield

The HUD may display different alerts and information for vehicles equipped with these features:

- Speed
- Audio
- Phone
- Navigation
- Performance
- Vehicle Messages

The HUD control is to the left of the steering wheel.

To adjust the HUD image:

1. Adjust the driver seat.
2. Start the engine.
3. Use the following settings to adjust the HUD.

HUD **:** Press or lift to center the HUD image. The HUD image can only be adjusted up and down, not side to side.

INFO **:** Press to select the display view. Each press will change the display view.

±☼ **:** Lift and hold to brighten the display. Press and hold to dim the display. Hold to turn the display off.

The HUD image will automatically dim and brighten to compensate for outside lighting. The HUD brightness control can also be adjusted as needed.

The HUD image can temporarily light up depending on the angle and position of the sunlight on the HUD display. This is normal.

Polarized sunglasses could make the HUD image harder to see.

Head-Up Display (HUD) Rotation Option

The HUD rotation main view is located in the options menu. From the main menu, press ▷ to enter adjust mode. Press △ for counter-clockwise and ▽ for clockwise. Press SEL to save and ◁ to cancel and exit.

HUD Views

There are four views in the HUD. Some vehicle information and vehicle messages or alerts may be displayed in any view.

Metric

English

Speed View : This displays digital Speed (in English or metric units), Speed Limit along with Indicators such as Vehicle Ahead, Lane Departure Warning/Lane Keep Assist, Adaptive Cruise Control and Set Speed.

Metric

English

Audio/Phone View : This displays digital speed, indicators from Speed view along with audio/phone information.

All HUD views may briefly display audio information when the steering wheel controls are used to adjust the audio settings appearing in the instrument cluster.

Incoming phone calls appearing in the instrument cluster may also display in any HUD view.

Metric

English

Navigation View : This displays digital speed, indicators from Speed view along with Turn-by-Turn Navigation information in some vehicles. When navigation routing is not active, the compass heading is displayed.

Metric

English

Performance View : This displays digital speed, indicators from speed view along with rpm reading, transmission positions, gear shift indicator (if equipped), Shift Timing Light Position (if equipped), and lateral acceleration (G) indicators.

If equipped, the shift timing lights at the top of the display will appear with increases in engine rpm. The rows of lights get closer together as the shift point gets closer. Shift the transmission before the lights come together in the display. Shift immediately if the lights are flashing. See *Manual Mode* ⇨ *186* or *Manual Transmission* ⇨ *188*.

Care of the HUD

Clean the inside of the windshield as needed to remove any dirt or film that could reduce the sharpness or clarity of the HUD image.

Clean the HUD lens with a soft cloth sprayed with glass cleaner. Wipe the lens gently, then dry it.

HUD Troubleshooting

If you cannot see the HUD image when the ignition is on, check that:

- Nothing Is covering the HUD lens.
- The HUD brightness is not too dim or too bright.
- The HUD is adjusted to the proper height.
- Polarized sunglasses are not worn.
- Windshield and HUD lens are clean.

If the HUD image is not correct, contact your dealer.

The windshield is part of the HUD system. See *Windshield Replacement* ⇨ *249*.

Vehicle Messages

Messages displayed on the DIC indicate the status of the vehicle or some action that may be needed to correct a condition. Multiple messages may appear one after another.

The messages that do not require immediate action can be acknowledged and cleared by pressing SEL. The messages that require immediate action cannot be cleared until that action is performed.

All messages should be taken seriously; clearing the message does not correct the problem.

If a SERVICE message appears, see your dealer.

Follow the instructions given in the messages. The system displays messages regarding the following topics:

- Service Messages
- Fluid Levels
- Vehicle Security
- Brakes
- Steering
- Ride Control Systems
- Driver Assistance Systems
- Cruise Control
- Lighting and Bulb Replacement
- Wiper/Washer Systems
- Doors and Windows
- Seat Belts
- Airbag Systems
- Engine and Transmission
- Tire Pressure
- Engine Air Filter Life
- Battery

Engine Power Messages

ENGINE POWER IS REDUCED

This message displays when the vehicle's propulsion power is reduced. A reduction in propulsion power can affect the vehicle's ability to accelerate. If this message is on, but there is no observed reduction in performance, proceed to your destination. The performance may be reduced the next time the vehicle is driven. The vehicle may be driven while this message is on, but maximum acceleration and speed may be reduced. Anytime this message stays on, or displays repeatedly, the vehicle should be taken to your dealer for service as soon as possible.

Under certain operating conditions, propulsion will be disabled. Try restarting after the vehicle has been off for 30 seconds.

Vehicle Speed Messages

SPEED LIMITED TO XXX KM/H (MPH)

This message shows that the vehicle speed has been limited to the speed displayed. The limited speed is a protection for various propulsion and vehicle systems, such as lubrication, thermal, brakes, suspension, Teen Driver if equipped, or tires.

Vehicle Personalization

The following are all possible vehicle personalization features. Depending on the vehicle, some may not be available.

For System, Apps, and Personal features and functions, see “Settings” in the infotainment manual.

To access the vehicle personalization menu:

1. Touch the Settings icon on the Home Page of the infotainment display.
2. Touch Vehicle to display a list of available options.
3. Touch to select the desired feature setting.
4. Touch ◯ or | to turn a feature off or on.
5. Touch ✕ to go to the top level of the Settings menu.

The menu may contain the following:

Driving Mode

Touch and the following may display:

- Engine Sound
- Steering
- Suspension

Engine Sound

Touch Engine Sound, then choose from the available options. See *Driver Mode Control* ⇨ *196*.

Steering

Touch Steering, then choose from the available options. See *Driver Mode Control* ⇨ *196*.

Suspension

Touch Suspension, then choose from the available options. See *Driver Mode Control* ⇨ *196*.

Climate and Air Quality

Touch and the following may display:

- Auto Fan Speed
- Auto Cooled Seats
- Auto Heated Seats
- Auto Defog
- Auto Rear Defog

Auto Fan Speed

This feature will set the auto fan speed.

Touch Low, Medium, or High.

Auto Cooled Seats

When enabled, this feature will automatically activate the ventilated seats at the level required by the interior temperature. See *Heated and Ventilated Front Seats* ⇨ *48*.

Touch Off or On.

Auto Heated Seats

This setting automatically turns on and regulates the heated seats when the cabin temperature is cool. The auto heated seats can be turned off by using the heated seat

buttons on the center stack. See *Heated and Ventilated Front Seats* ⇨ *48*.

Touch Off or On.

Auto Defog

When turned on and high humidity is detected, the climate control system may adjust to outside air supply and turn on the air conditioner or the heater. The fan speed may slightly increase to help prevent fogging. When high humidity is no longer detected, the system will return to its prior operation.

Touch Off or On.

Auto Rear Defog

When on, this feature turns on the rear defogger at vehicle start when the interior temperature is cold and fog is likely. The auto rear defog function can be disabled by pressing . When off, the feature can be turned on by pressing . See “Rear Window Defogger” under *Dual Automatic Climate Control System* ⇨ *146*.

Touch Off or On.

Collision/Detection Systems

Touch and the following may display:

- Lane Change Alert
- Park Assist
- Rear Camera Park Assist Symbols
- Rear Cross Traffic Alert

Lane Change Alert

This allows the Lane Change Alert feature to be turned on or off. See *Lane Change Alert (LCA)* ⇨ *211*.

When Lane Change Alert is disabled, Side Blind Zone Alert is also disabled.

Touch Off or On.

Park Assist

If equipped, this feature can assist in backing up and parking the vehicle. See *Assistance Systems for Parking or Backing* ⇨ *206*.

Touch Off or On.

Rear Camera Park Assist Symbols

This setting enables the Rear Camera Park Assist Symbols. See *Assistance Systems for Parking or Backing* ⇨ *206*.

Touch Off or On.

Rear Cross Traffic Alert

This allows the Rear Cross Traffic Alert feature to be turned on or off. See “Rear Cross Traffic Alert” in *Assistance Systems for Parking or Backing* ⇨ *206*.

Touch Off or On.

Comfort and Convenience

Touch and the following may display:

- Chime Volume
- Reverse Tilt Mirror

Chime Volume

This setting determines the chime volume level.

Touch the controls on the infotainment display to adjust the volume.

Reverse Tilt Mirror

When on, both the driver and passenger, driver, or passenger outside mirrors will tilt downward when the vehicle is shifted to R (Reverse) to improve visibility of the ground near the rear wheels. They will return to their previous driving position when the vehicle is shifted out of R (Reverse) or the engine is turned off.

Touch Off, On - Driver and Passenger, On - Driver, or On - Passenger.

Lighting

Touch and the following may display:

- Ambient Lighting
- Vehicle Locator Lights
- Exit Lighting

Ambient Lighting

This setting allows the selection of available colors for the ambient lighting in the vehicle.

The Link to Drive Mode option will change the ambient lighting to match the color being used in the instrument cluster based on the setting of the drive mode button.

This feature can be turned off or on.

Vehicle Locator Lights

This setting flashes the vehicle's headlamps when 🔓 is pressed on the Remote Keyless Entry (RKE) transmitter.

Touch Off or On.

Exit Lighting

This setting specifies how long the headlamps stay on after the vehicle is turned off and exited.

Touch Off, 30 Seconds, 60 Seconds, or 120 Seconds.

Power Door Locks

Touch and the following may display:

- Open Door Anti Lock Out
- Auto Door Unlock
- Delayed Door Lock

Open Door Anti Lock Out

This setting prevents the driver door from locking when the door is open. If this setting is on, the Delayed Door Lock menu will not be available.

Touch Off or On.

Auto Door Unlock

This allows selection of which of the doors will automatically unlock when the vehicle is shifted into P (Park) with an automatic transmission or when the vehicle is turned off with a manual transmission.

Select Off, All Doors, or Driver Door.

Delayed Door Lock

When on, this feature will delay the locking of the doors. To override the delay, press the power door lock switch on the door.

Touch Off or On.

Remote Lock, Unlock, Start

Touch and the following may display:

- Remote Unlock Light Feedback

- Remote Lock Feedback
- Remote Door Unlock
- Remote Start Auto Cool Seats
- Remote Start Auto Heat Seats
- Remote Window Operation
- Passive Door Unlock
- Passive Door Lock
- Remote Left in Vehicle Alert

Remote Unlock Light Feedback

This setting flashes the exterior lamps when the vehicle is unlocked with the RKE transmitter.

Touch Off or Flash Lights.

Remote Lock Feedback

This setting specifies how the vehicle responds when the vehicle is locked with the RKE transmitter.

Touch Off, Lights and Horn, Lights Only, or Horn Only.

Remote Door Unlock

This setting specifies whether all doors, or just the driver door, unlock when pressing 🔓 on the RKE transmitter.

Touch All Doors or Driver Door.

Remote Start Auto Cool Seats

If equipped and turned on, this feature will turn the ventilated seats on when using remote start on warm days.

Touch Off, On-Driver and Passenger, or On-Driver.

Remote Start Auto Heat Seats

This setting automatically turns on the heated seats when using the remote start function on cold days. See *Heated and Ventilated Front Seats* ⇨ *48* and *Remote Vehicle Start* ⇨ *16*.

Touch Off, On-Driver and Passenger, or On-Driver.

Remote Window Operation

If equipped, this feature enables remote operation of the windows with the RKE transmitter. See *Remote Keyless Entry (RKE) System Operation* ⇨ *8*.

Touch Off or On.

Passive Door Unlock

This setting specifies which doors unlock when using the button on the driver door handle to unlock the vehicle.

Touch Off, All Doors, or Driver Door Only.

Passive Door Lock

This setting specifies if the vehicle will automatically lock, or lock and provide an alert after all the doors are closed, and you walk away from the vehicle with the RKE transmitter. See *Remote Keyless Entry (RKE) System Operation* ⇨ *8*.

Touch Off, On with Horn Chirp, or On.

Remote Left in Vehicle Alert

This feature sounds an alert when the RKE transmitter is left in the vehicle. This menu also enables Remote No Longer in Vehicle Alert.

Touch Off or On.

Seating Position

Touch and the following may display:

- Seat Entry Memory
- Seat Exit Memory

Seat Entry Memory

This feature automatically recalls the previously stored 1 or 2 button positions when the ignition is changed from off to on or ACC/ACCESSORY. See *Memory Seats* ⇨ *44*.

Touch Off or On.

Seat Exit Memory

This feature automatically recalls the previously stored exit button positions when the ignition is changed from on or ACC/ACCESSORY to off if the driver door is open or opened. See *Memory Seats* ⇨ *44*.

Touch Off or On.

Teen Driver

See “Teen Driver” under “Settings” in the infotainment manual.

Valet Mode

This will lock the infotainment system and steering wheel controls. It may also limit access to vehicle storage locations, if equipped.

To enable valet mode:

1. Enter a four-digit code on the keypad.
2. Touch Enter to go to the confirmation screen.
3. Re-enter the four-digit code.

Touch Lock or Unlock to lock or unlock the system. Touch Back to go back to the previous menu.

Lighting

Exterior Lighting
Exterior Lamp Controls 130
Headlamp High/Low-Beam Changer 130
Flash-to-Pass 131
Daytime Running Lamps (DRL) 131
Automatic Headlamp System 131
Hazard Warning Flashers 132
Turn and Lane-Change Signals 133

Interior Lighting
Instrument Panel Illumination Control 133
Interior Lamps 134
Reading Lamps 134

Lighting Features
Entry Lighting 134
Exit Lighting 134
Theater Dimming 135
Battery Load Management . . . 135
Battery Power Protection 135
Exterior Lighting Battery Saver 135

Exterior Lighting

Exterior Lamp Controls

The exterior lamp control is on the left side of the steering wheel.

There are four positions:

⏻ **:** Briefly turn to this position to turn the exterior lamps off and deactivate the AUTO mode. Turn again to reactivate the AUTO mode. When released, the control returns to the AUTO position.

In Canada, the headlamps will automatically reactivate when the vehicle is shifted out of P (Park).

AUTO : Automatically turns the exterior lamps on and off, depending on outside lighting.

AUTO also controls the Daytime Running Lamps (DRL). See *Daytime Running Lamps (DRL)* ⇨ *131*.

: Turns on the parking lamps including all lamps, except the headlamps.

: Turns on the headlamps together with the parking lamps and instrument panel lights.

A warning chime sounds if the driver door is opened when the ignition is off and the headlamps or parking lamps are on.

Headlamp High/ Low-Beam Changer

Push the turn signal lever away from you and release to turn the high beams on. To return to low beams, push the lever again or pull it toward you and release.

This indicator light turns on in the instrument cluster when the high-beam headlamps are on.

Flash-to-Pass

The flash-to-pass feature works with the low beams or Daytime Running Lamps (DRL) on or off.

To flash the high beams, pull the turn signal lever all the way toward you, then release it.

Daytime Running Lamps (DRL)

DRL can make it easier for others to see the front of your vehicle during the day. DRL are required on all vehicles first sold in Canada.

A light sensor on top of the instrument panel makes the DRL work, so be sure it is not covered.

The dedicated DRL will come on when all of the following conditions are met:

- The ignition is on.
- The exterior lamps control is in AUTO, or has been briefly turned to ⏻ to turn the automatic light control on again.
- The light sensor determines it is daytime.
- The transmission is not in P (Park).

When the DRL are on, the headlamps, taillamps, sidemarker lamps, instrument panel lights, and other lamps will not be on.

The headlamps automatically change from DRL to the regular headlamps depending on the darkness of the surroundings. The other lamps that come on with the headlamps will also come on.

When it is bright enough outside, the headlamps will go off and the DRL will come on.

To turn the DRL off or on again, turn the exterior lamps control to ⏻ and then release. For vehicles first sold in Canada, the DRL can only be turned off when the vehicle is parked.

The regular headlamp system should be turned on when needed.

Automatic Headlamp System

When it is dark enough outside and the headlamp switch is in AUTO, the automatic headlamp system will turn on the headlamps at the normal brightness along with other lamps such as the taillamps, sidemarker lamps, parking lamps, license plate lamps, and the instrument panel lights. The radio lights will also be dim.

To turn off the automatic headlamp system, turn the exterior lamps switch to the ⏻ position and then release. For vehicles first sold in Canada, the transmission must be in P (Park), before the automatic headlamp system can be turned off.

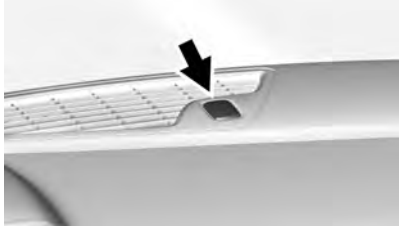

The vehicle has a light sensor on the top of the instrument panel. Do not cover this sensor, otherwise the system will come on whenever the ignition is on.

The system may also turn on the headlamps when driving through a parking garage, heavy overcast weather, or a tunnel. This is normal.

There is a delay in the transition between the daytime and nighttime operation of the Daytime Running Lamps (DRL) and the automatic headlamp system so that driving under bridges or bright overhead street lights does not affect the system. The DRL and automatic headlamp system will only be affected when the light sensor sees a change in lighting lasting longer than the delay.

If the vehicle is started in a dark garage, the automatic headlamp system comes on immediately. If it is light outside when the vehicle leaves the garage, there will be a slight delay before the automatic headlamp system changes to the DRL. During that delay, the instrument cluster may not be as bright as usual. Make sure the instrument panel brightness control is in the full bright position. See *Instrument Panel Illumination Control* ⇨ *133*.

Lights On with Wipers

If the windshield wipers are activated in daylight with the engine on, and the exterior lamp control is in AUTO, the headlamps, parking lamps, and other exterior lamps come on. The transition time for the lamps coming on varies based on wiper speed. When the wipers are not operating, these lamps turn off. Move the exterior lamp control to ⏻ or ≋ to disable this feature.

Hazard Warning Flashers

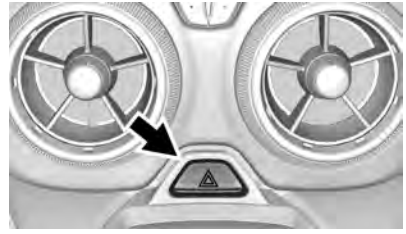

⚠ **:** Press to make the front and rear turn signal lamps flash on and off. This warns others that you are having trouble. Press again to turn the flashers off.

Turn and Lane-Change Signals

Move the lever all the way up or down to signal a turn.

An arrow on the instrument cluster flashes in the direction of the turn or lane change.

Raise or lower the lever until the arrow starts to flash to signal a lane change. Hold it there until the lane change is completed. If the lever is briefly pressed and released, the turn signal flashes three times.

The turn and lane-change signal can be turned off manually by moving the lever back to its original position.

For vehicles with HID headlamps, if after signaling a turn or lane change, the arrow flashes rapidly or does not come on, a signal bulb may be burned out.

Replace any burned out bulbs. If a bulb is not burned out, check the fuse. See *Fuses and Circuit Breakers* ⇨ *253*.

For vehicles with LED headlamps, contact your dealer if the LED is burned out. If the LED is not burned out, check the fuse. See *Fuses and Circuit Breakers* ⇨ *253*.

Interior Lighting

Instrument Panel Illumination Control

The knob for this feature is on the left side of the instrument panel.

Turn the knob clockwise or counterclockwise to brighten or dim the instrument panel lights at night. Turn the knob completely clockwise to turn on the interior lamps.

Interior Lamps

Interior Spectrum Lighting

If equipped, this feature allows the color of the interior lighting in the vehicle to be chosen.

To access, press ⌂ on the infotainment controls, then touch AMBIENT LIGHTING to display the settings screen.

Touch to select from the following:

OFF : Turns the feature off.

LIGHT STRIPS : Turns on standard mode. Touch the light strip color to select a color for the interior lighting.

DEMO MODE : When the shift lever is in P (Park) (automatic transmission) or the park brake is applied (manual transmission), touch to turn the feature on in colors chosen by the vehicle. When the shift lever is not in P (Park) or the park brake is not applied, the interior color will default to the last active color selected in light strips mode.

LINK TO DRIVE MODE : The light color is matched to the color being used for the drive mode.

Reading Lamps

The reading lamps are in the overhead console. The lamps go on when a door is opened. When the doors are closed, press ⚡ or ⚡ to turn on each lamp.

Lighting Features

Entry Lighting

Some exterior lamps and interior lamps turn on briefly at night, or in areas with limited lighting, when 🔓 is pressed on the Remote Keyless Entry (RKE) transmitter. When a door is opened, the interior lamps come on. They stay on for about 20 seconds. When all of the doors have been closed or the ignition is turned on, they gradually fade out.

This feature can be changed. See “Vehicle Locator Lights” under *Vehicle Personalization* ⇨ *125*.

Exit Lighting

Some exterior lamps and interior lights come on at night, or in areas with limited lighting, when the driver door is opened after the ignition is turned off. The interior lamps come on after the ignition is turned off. The exterior lamps and interior lamps remain on for a set amount of time, then automatically turn off.

The exterior lamps turn off immediately by turning the exterior lamp control off.

This feature can be changed. See *Vehicle Personalization* ⇨ *125*.

Theater Dimming

This feature allows for a three to five second fade out of the interior lamps instead of having them turn off immediately.

Battery Load Management

The vehicle has Electric Power Management (EPM) that estimates the battery's temperature and state of charge. It then adjusts the voltage for best performance and extended life of the battery.

When the battery's state of charge is low, the voltage is raised slightly to quickly bring the charge back up. When the state of charge is high, the voltage is lowered slightly to prevent overcharging. If the vehicle has a voltmeter gauge or a voltage display on the Driver Information Center (DIC), you may see the voltage move up or down. This is normal. If there is a problem, an alert will be displayed.

The battery can be discharged at idle if the electrical loads are very high. This is true for all vehicles. This is because the generator (alternator) may not be spinning fast enough at idle to produce all of the power needed for very high electrical loads.

A high electrical load occurs when several of the following are on, such as: headlamps, high beams, rear window defogger, climate control fan at high speed, heated seats, engine cooling fans, trailer loads, and loads plugged into accessory power outlets.

EPM works to prevent excessive discharge of the battery. It does this by balancing the generator's output and the vehicle's electrical needs. It can increase engine idle speed to generate more power whenever needed. It can temporarily reduce the power demands of some accessories.

Normally, these actions occur in steps or levels, without being noticeable. In rare cases at the highest levels of corrective action, this action may be noticeable to the driver. If so, a DIC message might be displayed and it is recommended that the driver reduce the electrical loads as much as possible.

Battery Power Protection

This feature shuts off the interior lamps if they are left on for more than 10 minutes when the ignition is off. This helps to prevent the battery from running down.

Exterior Lighting Battery Saver

The exterior lamps turn off about 10 minutes after the ignition is turned off, if the parking lamps or headlamps have been manually left on. This protects against draining the battery. To restart the 10-minute timer, turn the exterior lamp control

to the off position and then back to the parking lamp or headlamp position.

To keep the lamps on for more than 10 minutes, the ignition must be on or in ACC/ACCESSORY.

Infotainment System

Introduction
Infotainment 137

Performance Data Recorder (PDR)
Performance Data Recorder (PDR) 137

Introduction

Infotainment

See the infotainment manual for information on the radio, audio players, phone, navigation system, and voice or speech recognition. It also includes information on settings.

Active Noise Cancellation (ANC)

If equipped, ANC reduces engine noise in the vehicle's interior. ANC requires the factory-installed audio system, radio, speakers, amplifier (if equipped), induction system, and exhaust system to work properly. Deactivation is required by your dealer if related aftermarket equipment is installed.

Performance Data Recorder (PDR)

If equipped, the PDR icon displays on the Home Page.

Important Information

Use of the PDR may be prohibited or legally restricted in certain countries and situations. Ensure compliance with applicable laws and regulations, including, but not limited to: privacy laws, laws related to camera surveillance and recordings, road traffic and security laws, and laws on the protection of publicity and personality rights.

- Do not use the PDR if it causes distraction.
- Do not rely on camera footage to steer the vehicle.
- Comply with any notice and consent requirements before capturing and/or recording the voices or images of other persons or before collecting other personal data.

- Notify other drivers of your vehicle of the above rules and require them to comply.
- General Motors does not accept any responsibility or liability in connection with use that is not permitted.
- Law enforcement authorities may have the right to seize video recordings and use them as evidence of criminal/driving offenses against you or third parties.

The PDR records video, audio, and vehicle data. This data is stored on a removable SD card. The SD card reader is below the instrument panel to the left of the steering wheel and just above the hood release.

The recorded data is not stored anywhere else and is only accessible from the SD card.

To begin, insert a FAT32 formatted SD card, Class 10 required, 8, 16, or 32 GB recommended, into the SD card reader.

Touch the PDR icon to access the PDR menu. The options displayed are:

Start Recording

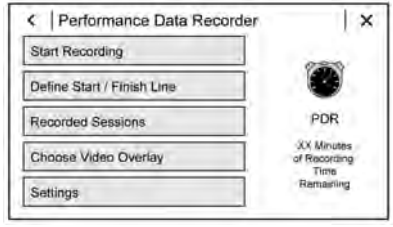

If the system is unable to begin recording, the Start Recording button is grayed out.

Touch Start Recording to begin recording. After recording begins, this button changes to Stop Recording. Touch to stop the recording session.

The recording must be stopped and the file closed before removing the SD card, or the recording cannot be reviewed.

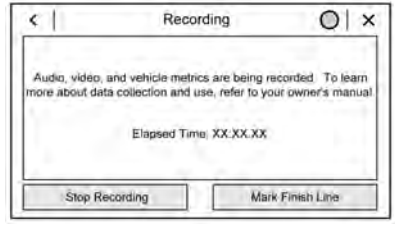

The elapsed time will show when recording. To define a finish line, see “Define Finish Line” later in this section.

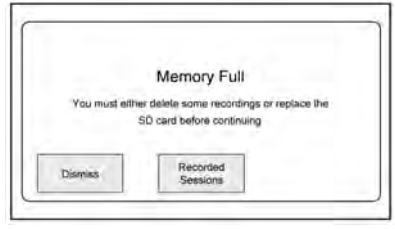

If there is no available space on the SD card, a message displays. Delete or transfer recordings on the SD card or use another SD card with free space.

To delete a recording, go to the Recorded Sessions menu and touch ✓ next to the item. See “Recorded Sessions” later in this section.

If no SD card is inserted, a message displays.

Define Finish Line

To track and record the vehicle’s lap times, the starting point of a lap must be set. Crossing this point activates the lap timer when recording.

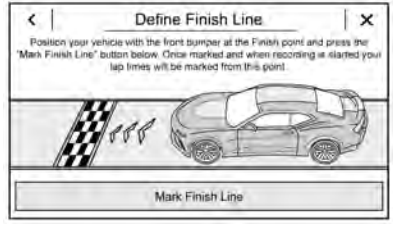

To set the finish line, position the vehicle with the front bumper at the start/finish point. From the PDR menu, touch Define Finish Line and then touch Mark Finish Line. This can be done with the vehicle moving.

Recorded Sessions

To view recorded videos, touch Recorded Sessions.

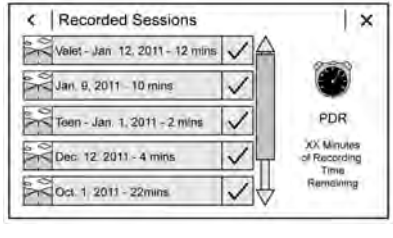

A list of recordings displays.

Select the recording to start playback.

Touch ✓ next to an item to delete that recording. Touch Yes to delete or No to cancel on the confirmation screen.

Video playback is not allowed while the vehicle is in motion.

Tap the screen while the video is playing to display the video controls:

Video Scrubber : Changes the position and playback. The length of the bar corresponds to the time of the video. Advance or rewind the video by dragging along the bar.

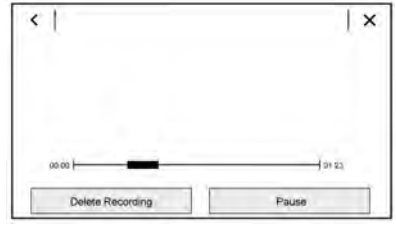

Delete Recording : Touch to delete the video. A confirmation screen displays. Touch Yes to delete or No to cancel.

Pause/Play : Touch to play or pause the video. The button will change when touched.

⇦ **:** Touch to display the previous screen.

Exit : Touch to exit the current display.

Choose Video Overlay

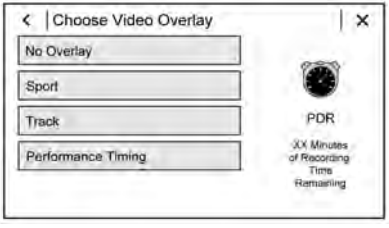

Touch Choose Video Overlay to display the menu.

Select one:

- No Overlay
- Sport
- Track
- Performance Timing

No Overlay:

No vehicle data displays on top of the recorded video. Vehicle data is still available with the video when accessed in the toolbox software.

Sport:

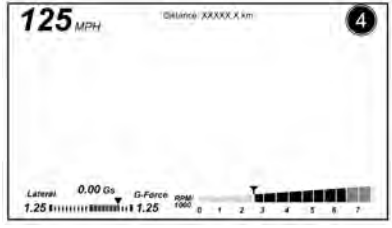

Displays these vehicle metrics:

- Vehicle Speed: Up to three digits are displayed in km/h or MPH depending on vehicle settings.
- Engine Rotations Per Minute (RPMs): The vertical line and triangle show current RPMs. As the RPMs increase, the backfill follows.
- Transmission State (Current Gear): Automatic and manual transmissions display 1, 2, etc.
- Lateral G-Force Graphic: Left and Right G-Forces are displayed. The graphic fills to the left or the right depending on the measure value. The measured G-Force displays as a number at the top of the graphic.
- Event Odometer: This displays the distance driven since the recording began.

Track:

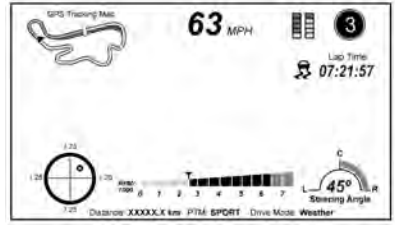

Displays these vehicle metrics:

- Vehicle Speed: Same as Sport.

- GPS Tracking Map: Shows the vehicle's current position relative to a known route.
- Engine Rotations Per Minute (RPMs): The vertical line and triangle indicate current RPMs. As the RPMs increase, the backfill follows.
- Transmission State (Current Gear): Same as Sport.
- Friction Bubble Graphic: Lateral and longitudinal G-Forces are displayed as a dot within a bubble. A red dot displays when the vehicle starts braking and turns green when the vehicle accelerates. The dot is white when the vehicle is not moving. A white dot is the default.
- Brake and Throttle Graphic: Displays the percentage value of brake and throttle pedal position from 0–100%.
- Steering Angle: The graphic fills from the center to the left or right depending on the direction of steering. The numerical steering angle displays below the graphic.
- StabiliTrak/Electronic Stability Control (ESC) Active Indicator: The graphic only displays if the active handling systems are activated.
- Performance Traction Management (PTM) Mode: Displays the current PTM mode. The options are Wet, Dry, Sport 1, Sport 2, or Race.
- Current Lap Time: Displays the elapsed lap time if the finish line is defined and the vehicle has crossed the defined finish line at least once.
- Event Odometer: Displays the distance driven since the recording began.
- Drive Mode: Displays the vehicle's current drive mode.

Performance Timing:

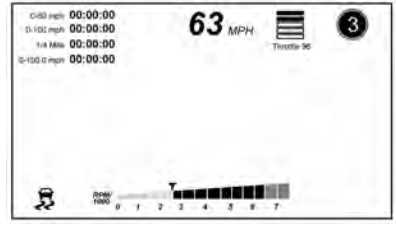

Displays these vehicle metrics:

- Vehicle Speed: Same as Sport.
- Engine Rotations Per Minute (RPMs): Same as Sport.
- Transmission State (Current Gear): Same as Sport.
- 0–100 km/h (0–60 mph), 0–200 km/h (0–100 mph), 400 m (1/4 mi), and 0–200–0 km/h (0–100–0 mph): The timer starts recording as soon as the vehicle accelerates. As the vehicle passes each speed and distance milestone, it is displayed on the overlay.
- Throttle Position: Displays the percentage of throttle applied from 0–100%.

- StabiliTrak/ESC Active Indicator: The graphic only displays if the active handling systems are activated.

Naming Convention

The recorded video file name is stored as the recorded date and the length of the recording.

If the recorded session was recorded while the system was in Valet Mode, the file name will display the mode, date, and length of time.

Settings

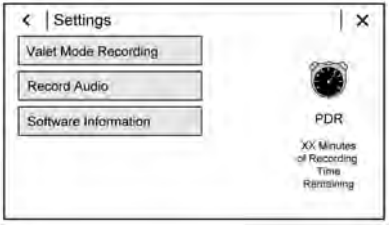

Touch Settings on the PDR menu to display settings.

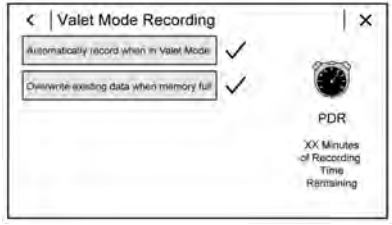

Valet Mode Recording : Allows recording preferences to be selected. It is recommended that a blank SD card be used. Available choices are:

- Automatically record when in Valet Mode: Enables the PDR to begin recording as soon as the vehicle is in Valet Mode.
- Overwrite existing data when memory full: Allows manual overwriting of previous recordings, one at a time starting with the oldest, when the current recording requires additional storage to continue.

Audio will not record during Valet Mode.

Record Audio : Allows audio to be recorded along with video.

Audio will not record during Valet Mode.

Software Information : Displays PDR software information and version numbers.

Toolbox Software : Allows for the evaluation of the driver and the vehicle performance on a personal computer after a recorded event. See www.chevrolet.com or your dealer for details to download the software.

Climate Controls

Climate Control Systems
Automatic Climate Control System 143
Dual Automatic Climate Control System 146

Air Vents
Air Vents 150

Maintenance
Passenger Compartment Air Filter 150
Service 150

Climate Control Systems

Automatic Climate Control System

The heating, cooling, defrosting, and ventilation for the vehicle can be controlled with this system.

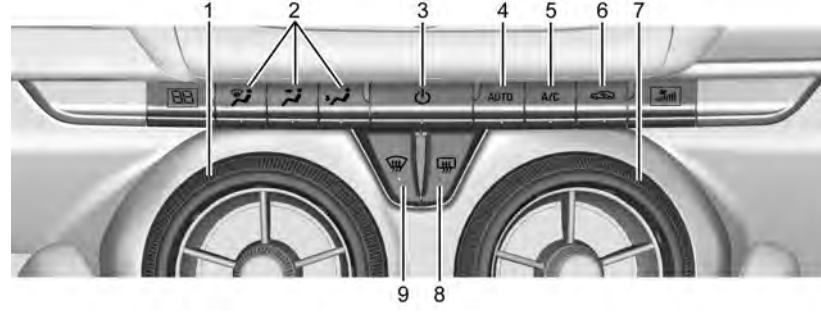

1. Temperature Control
2. Air Delivery Mode Controls
3. ⏻ (Power)
4. AUTO (Automatic Operation)
5. A/C (Air Conditioning)
6. Recirculation
7. Fan Control
8. Rear Window Defogger
9. Defrost

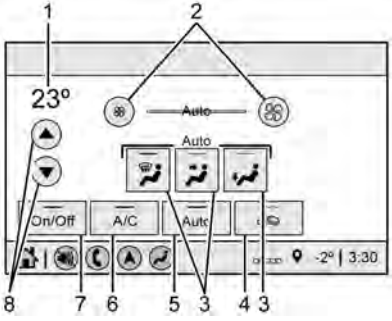

Climate Control Display

1. Temperature Setting
2. Fan Control
3. Air Delivery Mode Control
4. Air Recirculation
5. Auto (Automatic Operation)
6. A/C (Air Conditioning)
7. On/Off (Power)
8. Temperature Controls

Climate Control Status Display

The climate control status display appears briefly when the climate controls on the center stack are adjusted.

Automatic Operation

The system automatically controls the fan speed, air delivery, air conditioning, and recirculation in order to heat or cool the vehicle to the desired temperature:

When AUTO is lit, all four functions operate automatically. Each function can also be manually set and the setting is displayed. Functions not manually set will continue to be automatically controlled, even if the AUTO indicator is not lit.

For automatic operation:

1. Press AUTO.
2. Set the temperature. Allow the system time to stabilize. Adjust the temperature as needed for best comfort.

⏻ **:** Press to turn the fan off or on.

Temperature Control : Turn the outer ring of the air vent clockwise or counterclockwise to increase or decrease the temperature setting.

Fan Control : Turn the outer ring of the air vent clockwise or counterclockwise to increase or decrease the fan speed.

Air Delivery Mode Controls : Press , , or to change the direction of the airflow. Any combination of the three buttons can be selected. The indicator light in the button will turn on. The current mode appears in the display

screen. Pressing any of the three buttons cancels automatic air delivery control and the direction of the airflow is controlled manually. Press AUTO to return to automatic operation.

To change the current mode, select one or more of the following:

: Clears the windows of fog or moisture. Air is directed to the windshield and side window outlets.

: Air is directed to the instrument panel outlets.

: Air is directed to the floor outlets.

: Clears the windshield of fog or frost more quickly. Air is only directed to the windshield and side window outlets. The air conditioning may turn on automatically to remove fog.

For best results, clear all snow and ice from the windshield before defrosting.

Do not drive the vehicle until all windows are clear.

Air Conditioning

A/C : Press to turn the air conditioning on or off. An indicator light turns on. If the fan is turned off or the outside temperature falls below freezing, the air conditioning will not run, but the indicator light will be lit.

The air conditioning might automatically come on when is selected.

: Press to turn on recirculation. An indicator light comes on. Air is recirculated inside the vehicle. It helps to quickly cool the air inside the vehicle or reduce the outside air and odors that may enter.

Operation in the recirculation mode while the air conditioner is off increases humidity and may cause the windows to fog.

Recirculation is not available in the defrost or defog modes.

To improve fuel efficiency and to cool the vehicle faster, recirculation may be automatically selected in warm weather. The recirculation light will not come on. Press to select recirculation; press it again to select outside air.

Rear Window Defogger

: Press to turn the rear window defogger on or off. An indicator light on the button comes on to show that the rear window defogger is on. The defogger turns off if the ignition is turned off or to ACC/ACCESSORY.

The rear window defogger can be set to automatic operation. See “Climate and Air Quality” under *Vehicle Personalization* ⇨ *125*. When Auto Rear Defog is selected, the rear window defogger turns on automatically when the interior temperature is cold and the outside temperature is about 7 °C (44 °F) and below.

The heated outside mirrors turn on when the rear window defogger button is on and help to clear fog or frost from the surface of the mirrors.

Do not drive the vehicle until all windows are clear.

Caution

Do not use a razor blade or sharp object to clear the inside rear window. Do not adhere anything to the defogger grid lines in the rear glass. These actions may damage the rear defogger. Repairs would not be covered by the vehicle warranty.

Remote Start Climate Control Operation, If Equipped : The climate control system may run when the vehicle is started remotely, depending on the outside temperature. See *Remote Vehicle Start* ⇨ *16*. The rear defog may come on during remote start based on cold ambient conditions. The rear defog indicator light does not come on during a remote start. When enabled, the front heated seats, if equipped, will turn on automatically if it is cold outside. See *Vehicle Personalization* ⇨ *125*. The heated seat indicator lights do not come on during a remote start.

Dual Automatic Climate Control System

The heating, cooling, defrosting, and ventilation for the vehicle can be controlled with this system.

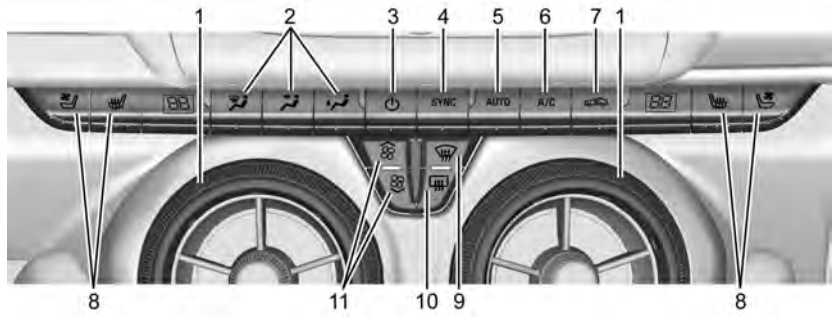

1. Driver and Passenger Temperature Controls
2. Air Delivery Mode Controls
3. ⏻ (Power)
4. SYNC (Synchronized Temperature)
5. AUTO (Automatic Operation)
6. A/C (Air Conditioning)
7. Recirculation
8. Driver and Passenger Heated and Ventilated Seats (If Equipped)
9. Defrost
10. Rear Window Defogger
11. Fan Control

Climate Control Display

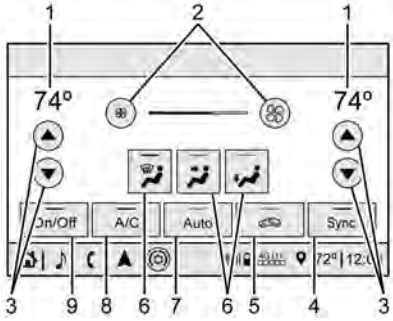

1. Driver and Passenger Temperature Settings
2. Fan Control
3. Driver and Passenger Temperature Controls
4. Sync (Synchronized Temperature)
5. Recirculation
6. Air Delivery Mode Controls
7. Auto (Automatic Operation)
8. A/C (Air Conditioning)
9. On/Off (Power)

The fan, air delivery mode, air conditioning, driver and passenger temperatures, and Sync settings can be controlled by touching CLIMATE on the infotainment Home Page or the climate button in the climate control display application tray. A selection can then be made on the front climate control page displayed. See the infotainment manual.

Climate Control Status Display

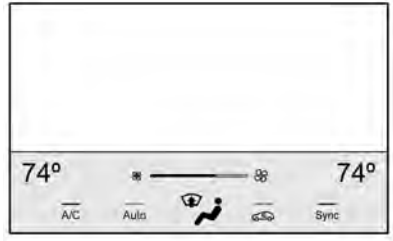

The climate control status display appears briefly when the center stack climate controls are adjusted.

Automatic Operation

The system automatically controls the fan speed, air delivery, air conditioning, and recirculation in order to heat or cool the vehicle to the desired temperature:

When AUTO is lit, all four functions operate automatically. Each function can also be manually set and the setting is displayed. Functions not manually set will continue to be automatically controlled, even if the AUTO indicator is not lit.

For automatic operation:

1. Press AUTO.
2. Set the temperature. Allow the system time to stabilize. Adjust the temperature as needed for best comfort.

Driver and Passenger Temperature Controls : The temperature can be adjusted separately for the driver and the passenger. Turn the outer ring of the air vents clockwise or counterclockwise to increase or

decrease the driver or passenger temperature setting. The setting will appear on the temperature display.

SYNC : Press to link the passenger climate temperature settings to the driver setting. The SYNC indicator light will turn on. When the passenger settings are adjusted, the SYNC indicator light turns off.

Manual Operation

⏻ : Press to turn the fan off or on.

or : Press to increase or decrease the fan speed.

Air Delivery Mode Controls : Press , , or to change the direction of the airflow. Any combination of the three buttons can be selected. The indicator light in the button will turn on. The current mode appears in the display screen. Pressing any of the three buttons cancels automatic air delivery control and the direction of the airflow is controlled manually. Press AUTO to return to automatic operation.

To change the current mode, select one or more of the following:

: Clears the windows of fog or moisture. Air is directed to the windshield and side window outlets.

: Air is directed to the instrument panel outlets.

: Air is directed to the floor outlets.

: Clears the windshield of fog or frost more quickly. Air is only directed to the windshield and side window outlets. The air conditioning may turn on automatically to remove fog.

For best results, clear all snow and ice from the windshield before defrosting.

Do not drive the vehicle until all windows are clear.

Air Conditioning

A/C : Press to turn the air conditioning on or off. An indicator light turns on. If the fan is turned off or the outside temperature falls below freezing, the air conditioning will not run, but the indicator light will be lit.

The air conditioning might automatically come on when is selected.

: Press to turn on recirculation. An indicator light comes on. Air is recirculated inside the vehicle.
It helps to quickly cool the air inside the vehicle or reduce the outside air and odors that may enter.

Operation in the recirculation mode while the air conditioner is off increases humidity and may cause the windows to fog.

Recirculation is not available in the defrost or defog modes.

To improve fuel efficiency and to cool the vehicle faster, recirculation may be automatically selected in warm weather. The recirculation

light will not come on. Press to select recirculation; press it again to select outside air.

Rear Window Defogger

: Press to turn the rear window defogger on or off. An indicator light on the button comes on to show that the rear window defogger is on. The defogger turns off if the ignition is turned off or to ACC/ACCESSORY.

The rear window defogger can be set to automatic operation. See "Climate and Air Quality" under *Vehicle Personalization* ⇨ *125*. When Auto Rear Defog is selected, the rear window defogger turns on automatically when the interior temperature is cold and the outside temperature is about 7 °C (44 °F) and below.

The heated outside mirrors turn on when the rear window defogger button is on and help to clear fog or frost from the surface of the mirrors.

Do not drive the vehicle until all windows are clear.

Caution

Do not use a razor blade or sharp object to clear the inside rear window. Do not adhere anything to the defogger grid lines in the rear glass. These actions may damage the rear defogger. Repairs would not be covered by the vehicle warranty.

or (If Equipped) : Press or to heat the driver or passenger seat.

Press or, if equipped, to ventilate the driver or passenger seat. See *Heated and Ventilated Front Seats* ⇨ *48*.

Remote Start Climate Control Operation, If Equipped : The climate control system may run when the vehicle is started remotely, depending on the outside temperature. See *Remote Vehicle Start* ⇨ *16*. The rear defog may come on during remote start based on cold ambient conditions. The rear defog indicator light does not come on during a remote start. When enabled, the front heated seats, if equipped, will turn on automatically if it is cold outside. See *Vehicle Personalization* ⇨ *125*. The heated seat indicator lights do not come on during a remote start.

Air Vents

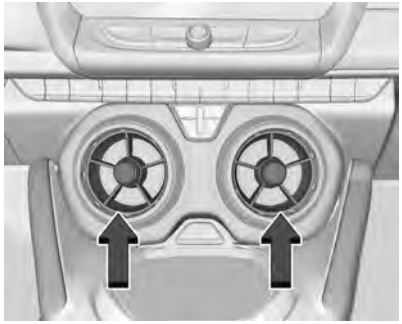

Use the air outlets in the center and on the side of the instrument panel to direct the airflow. Turn the center knobs on the air outlets clockwise or counterclockwise to open or close off the airflow.

Operation Tips

- In defog or defrost mode, warm air flows from side air outlets. To improve side window defogging or defrosting, direct side air outlets toward the side windows.
- Clear away any ice, snow, or leaves from air inlets at the base of the windshield that could block the flow of air into the vehicle.
- Clear snow off the hood to improve visibility and help decrease moisture drawn into the vehicle.
- Keep the path under the front seats clear of objects to help circulate the air inside of the vehicle more effectively.
- Use of non-GM approved hood deflectors can adversely affect the performance of the system. Check with your dealer before adding equipment to the outside of the vehicle.

Maintenance

Passenger Compartment Air Filter

The passenger compartment air filter reduces dust, pollen, and other airborne irritants from outside air that is pulled into the vehicle. The filter will need to be replaced periodically. See *Maintenance Schedule* ⇨ *306*.

Using the climate control system without an air filter installed is not recommended. Water or other debris could enter the system and result in leaks or noises. Always install a new filter when removing the old filter.

For more information on filter replacement, see your dealer.

Service

All vehicles have a label underhood that identifies the refrigerant used in the vehicle. The refrigerant system should only be serviced by trained and certified technicians. The air

conditioning evaporator should never be repaired or replaced by one from a salvage vehicle. It should only be replaced by a new evaporator to ensure proper and safe operation.

During service, all refrigerants should be reclaimed with proper equipment. Venting refrigerants directly to the atmosphere is harmful to the environment and may also create unsafe conditions based on inhalation, combustion, frostbite, or other health-based concerns.

The air conditioning system requires periodic maintenance. See *Maintenance Schedule* ⇨ *306*.

Driving and Operating

Driving Information
Driving for Better Fuel Economy 153
Distracted Driving 153
Defensive Driving 154
Drunk Driving 154
Control of a Vehicle 155
Braking 155
Steering 155
Off-Road Recovery 156
Loss of Control 156
Track Events and Competitive Driving 157
Driving on Wet Roads 167
Hill and Mountain Roads 167
Winter Driving 168
If the Vehicle Is Stuck 169
Vehicle Load Limits 170

Starting and Operating
New Vehicle Break-In 174
Ignition Positions 175
Starting the Engine 176
Engine Heater 178
Retained Accessory Power (RAP) 179
Shifting Into Park 180
Shifting out of Park 180
Parking (Manual Transmission) 181
Parking over Things That Burn 181
Active Fuel Management 181
Extended Parking 182

Engine Exhaust
Engine Exhaust 182
Running the Vehicle While Parked 183

Automatic Transmission
Automatic Transmission 183
Manual Mode 186

Manual Transmission
Manual Transmission 188
Active Rev Match 190

Brakes
Antilock Brake System (ABS) 191
Electric Parking Brake 192
Brake Assist 193
Hill Start Assist (HSA) 194

Ride Control Systems
Traction Control/Electronic Stability Control 194
Driver Mode Control 196
Competitive Driving Mode (SS, ZL1 and 1LE Models Only) 200
Limited-Slip Rear Axle 202

Cruise Control
Cruise Control 202

Driver Assistance Systems
Driver Assistance Systems . . . 205
Assistance Systems for Parking or Backing 206
Forward Collision Alert (FCA) System 208
Side Blind Zone Alert (SBZA) 210
Lane Change Alert (LCA) 211

Fuel
Top Tier Fuel 213
Recommended Fuel (3.6L V6 Engine) 213
Recommended Fuel (2.0L L4 Turbo Engine and 6.2L V8 Engine) 213
Recommended Fuel (6.2L V8 Supercharged Engine) 214

Prohibited Fuels 214
Fuels in Foreign Countries . . . 214
Fuel Additives 215
Filling the Tank 215
Filling a Portable Fuel Container 217

Trailer Towing
General Towing Information 217

Conversions and Add-Ons
Add-On Electrical Equipment 218

Driving Information

Driving for Better Fuel Economy

Driving habits can affect fuel mileage. Here are some driving tips to get the best fuel economy possible.

- Set the climate controls to the desired temperature after the engine is started, or turn them off when not required.
- Avoid fast starts and accelerate smoothly.
- Brake gradually and avoid abrupt stops.
- Avoid idling the engine for long periods of time.
- When road and weather conditions are appropriate, use cruise control.
- Always follow posted speed limits or drive more slowly when conditions require.
- Keep vehicle tires properly inflated.
- Combine several trips into a single trip.
- Replace the vehicle's tires with the same TPC Spec number molded into the tire's sidewall near the size.
- Follow recommended scheduled maintenance.

Distracted Driving

Distraction comes in many forms and can take your focus from the task of driving. Exercise good judgment and do not let other activities divert your attention away from the road. Many local governments have enacted laws regarding driver distraction. Become familiar with the local laws in your area.

To avoid distracted driving, keep your eyes on the road, keep your hands on the steering wheel, and focus your attention on driving.

- Do not use a phone in demanding driving situations. Use a hands-free method to place or receive necessary phone calls.
- Watch the road. Do not read, take notes, or look up information on phones or other electronic devices.
- Designate a front seat passenger to handle potential distractions.
- Become familiar with vehicle features before driving, such as programming favorite radio stations and adjusting climate control and seat settings. Program all trip information into any navigation device prior to driving.
- Wait until the vehicle is parked to retrieve items that have fallen to the floor.
- Stop or park the vehicle to tend to children.
- Keep pets in an appropriate carrier or restraint.
- Avoid stressful conversations while driving, whether with a passenger or on a cell phone.

⚠ Warning

Taking your eyes off the road too long or too often could cause a crash resulting in injury or death. Focus your attention on driving.

Refer to the infotainment manual for more information on using that system and the navigation system, if equipped, including pairing and using a cell phone.

Defensive Driving

Defensive driving means “always expect the unexpected.” The first step in driving defensively is to wear the seat belt. See *Seat Belts* ⇨ *50*.

- Assume that other road users (pedestrians, bicyclists, and other drivers) are going to be careless and make mistakes. Anticipate what they may do and be ready.
- Allow enough following distance between you and the driver in front of you.
- Focus on the task of driving.

Drunk Driving

Death and injury associated with drinking and driving is a global tragedy.

⚠ Warning

Drinking and then driving is very dangerous. Your reflexes, perceptions, attentiveness, and judgment can be affected by even a small amount of alcohol. You can have a serious — or even fatal — collision if you drive after drinking.

Do not drink and drive or ride with a driver who has been drinking. Ride home in a cab; or if you are with a group, designate a driver who will not drink.

Control of a Vehicle

Braking, steering, and accelerating are important factors in helping to control a vehicle while driving.

Braking

Braking action involves perception time and reaction time. Deciding to push the brake pedal is perception time. Actually doing it is reaction time.

Average driver reaction time is about three-quarters of a second. In that time, a vehicle moving at 100 km/h (60 mph) travels 20 m (66 ft), which could be a lot of distance in an emergency.

Helpful braking tips to keep in mind include:

- Keep enough distance between you and the vehicle in front of you.
- Avoid needless heavy braking.
- Keep pace with traffic.

If the engine ever stops while the vehicle is being driven, brake normally but do not pump the brakes. Doing so could make the pedal harder to push down. If the engine stops, there will be some power brake assist but it will be used when the brake is applied. Once the power assist is used up, it can take longer to stop and the brake pedal will be harder to push.

Steering

Caution

To avoid damage to the steering system, do not drive over curbs, parking barriers, or similar objects at speeds greater than 3 km/h (1 mph). Use care when driving over other objects such as lane dividers and speed bumps. Damage caused by misuse of the vehicle is not covered by the vehicle warranty.

Electric Power Steering

The vehicle has electric power steering. It does not have power steering fluid. Regular maintenance is not required.

If power steering assist is lost due to a system malfunction, the vehicle can be steered, but may require increased effort.

If the steering assist is used for an extended period of time while the vehicle is not moving, power assist may be reduced.

If the steering wheel is turned until it reaches the end of its travel and is held against that position for an extended period of time, power steering assist may be reduced.

Normal use of the power steering assist should return when the system cools down.

See your dealer if there is a problem.

Curve Tips

- Take curves at a reasonable speed.
- Reduce speed before entering a curve.
- Maintain a reasonable steady speed through the curve.
- Wait until the vehicle is out of the curve before accelerating gently into the straightaway.

Steering in Emergencies

- There are some situations when steering around a problem may be more effective than braking.
- Holding both sides of the steering wheel allows you to turn 180 degrees without removing a hand.
- The Antilock Brake System (ABS) allows steering while braking.

Off-Road Recovery

The vehicle's right wheels can drop off the edge of a road onto the shoulder while driving. Follow these tips:

1. Ease off the accelerator and then, if there is nothing in the way, steer the vehicle so that it straddles the edge of the pavement.
2. Turn the steering wheel about one-eighth of a turn, until the right front tire contacts the pavement edge.
3. Turn the steering wheel to go straight down the roadway.

Loss of Control

Skidding

There are three types of skids that correspond to the vehicle's three control systems:

- Braking Skid — wheels are not rolling.
- Steering or Cornering Skid — too much speed or steering in a curve causes tires to slip and lose cornering force.
- Acceleration Skid — too much throttle causes the driving wheels to spin.

Defensive drivers avoid most skids by taking reasonable care suited to existing conditions, and by not overdriving those conditions. But skids are always possible.

If the vehicle starts to slide, follow these suggestions:

- Ease your foot off the accelerator pedal and steer the way you want the vehicle to go. The vehicle may straighten out. Be ready for a second skid if it occurs.
- Slow down and adjust your driving according to weather conditions. Stopping distance can be longer and vehicle control can be affected when traction is reduced by water, snow, ice, gravel, or other material on the road. Learn to recognize warning clues — such as enough water, ice, or packed snow on the road to make a mirrored surface — and slow down when you have any doubt.
- Try to avoid sudden steering, acceleration, or braking, including reducing vehicle speed by shifting to a lower gear. Any sudden changes could cause the tires to slide.

Remember: Antilock brakes help avoid only the braking skid.

Track Events and Competitive Driving

⚠ Danger

High-performance features are intended for use only on closed tracks by experienced and qualified drivers and should not be used on public roads. High-speed driving, aggressive cornering, hard braking, and other high-performance driving can be dangerous. Improper driver inputs for the conditions may result in loss of control of the vehicle, which could injure or kill you or others. Always drive safely.

If the vehicle is a Camaro High Performance model, see the additional items in the Camaro High Performance supplement.

Track events or competitive driving may affect the vehicle warranty. See the warranty manual before using the vehicle for racing or other competitive driving.

The Engine Sound Management setting (if equipped) should not be set to Stealth Mode during track events and competitive driving. See *Driver Mode Control* ⇨ *196*.

⚠ Warning

Prior to each track event and again before returning to public roads, tighten the wheel nuts with a torque wrench to the proper torque specification. Wheel nuts that are improperly or incorrectly tightened can cause the wheels to become loose or come off,

(Continued)

Warning (Continued)

resulting in a crash. See *Capacities and Specifications* ⇨ *320* for wheel nut torque specifications.

Engine Oil

Caution

If you use the vehicle for racing or other competitive driving, the engine may use more oil than it would with normal use. Low oil levels can damage the engine. For information on how to add oil, see *Engine Oil* ⇨ *229*.

Be sure to check the oil level often during racing or other competitive driving and keep the level at or near the upper mark that shows the proper operating range on the engine oil dipstick.

3.6L (LGX) V6 Engine

Change the engine oil to 0W-40 or 5W-40 that meets the dexos2 specification. If this oil is not available, the following oil can be used as an alternative: Valvoline SYNPOWER MST 5W-40.

For LS/LT 1LE, add 0.9 L (1.0 qt) of oil over the nominal fill level for a track event. After the competitive driving, remove the excess oil so that the level on the dipstick is not above the upper mark that shows the proper operating range.

During track usage, do not follow the Engine Oil Life System status. Change the engine oil after four hours of accumulative track usage.

Fuel

Use premium unleaded gasoline with a posted octane rating of 93 at a track event. Unleaded gasoline with a posted octane rating of 91 may be used, but performance will be degraded.

Automatic Transmission Fluid

Have the transmission fluid set to the track specific oil level prior to track usage. Transmission fluid should be changed after every 15 hours of track usage. Any transmission level set or change should be performed at your dealer.

Manual Transmission Fluid

Manual transmission fluid should be changed after every 15 hours of track usage.

Rear Axle Fluid

Axles must have 2 400 km (1,500 mi) before being used in track driving.

The rear axle fluid temperatures may be higher than when driving in severe conditions. Drain and refill with new fluid after the first racing or competitive driving event, and then after every 24 hours of racing or competitive driving. See *Recommended Fluids and Lubricants* ⇨ *315*.

Caution

During a first time track or racing event, high rear axle temperatures can occur. Damage could be caused to the rear axle and would not be covered by the vehicle warranty. Do not drive as long or as fast the first time the vehicle is driven on the track or raced.

Brake Fluid

For track events or competitive driving, it is recommended that the brake fluid be replaced with a high performance brake fluid that has a dry boiling point greater than 279 °C (534 °F). After conversion to the high performance brake fluid, follow the brake fluid service recommendations outlined by the fluid manufacturer. Do not use silicone or DOT-5 brake fluids.

Brake Burnishing

To prepare the Camaro brake systems for track events and racing, complete the appropriate high performance brake burnishing procedure described below.

New brake pads must be burnished before racing or competitive driving.

Caution

These procedures are specific to the Camaro SS, or LT with Y4Q Heavy Duty Cooling System that is equipped with J55 brakes. This procedure should not be run on other Camaro models as damage may result.

Caution

The new vehicle break-in period should be completed before performing the brake burnishing

(Continued)

Caution (Continued)

procedure or damage may occur to the powertrain/engine. See *New Vehicle Break-In* ⇨ *174*.

When performed as instructed, this procedure will not damage the brakes. During the burnishing procedure, the brake pads will smoke and produce an odor. The braking force and pedal travel may increase. After the procedure is complete, the brake pads may appear white at the rotor contact.

Run this procedure in a safe manner and in compliance with all local and state ordinances/laws regarding motor vehicle operation. Run this procedure only on dry pavement.

Racing/Track Brake Burnishing Procedure

Caution
Brake fade will occur during this track burnish procedure and can cause brake pedal travel and force to increase. This could extend stopping distance until the brakes are fully burnished.

1. Apply the brakes 25 times starting at 100 km/h (60 mph) to 50 km/h (30 mph) while decelerating at 0.4 g. This is a medium brake application. Drive for at least 1 km (0.6 mi) between applying the brakes. This first step may be skipped if there are more than 320 km (200 mi) on the brake pads.
2. Repeatedly apply the brakes from 100 km/h (60 mph) to 25 km/h (15 mph) while decelerating at 0.8 g. This is a hard brake application, without activating the Antilock Brake System (ABS). Drive for at least 1 km (0.6 mi) between stops. Repeat until the brake pedal travel starts to increase. Depending on conditions, this should take no longer than 25 brake applications.
3. Cool down: Drive at 100 km/h (60 mph) for approximately 15 km (10 mi) without using the brakes.
4. Apply the brakes 25 times from 100 km/h (60 mph) to 50 km/h (30 mph) while decelerating at 0.4 g. This is a medium brake application. Drive for at least 1 km (0.6 mi) between applications.

Front Tire Deflectors, Lower Control Arm Deflectors, and Disc Splash Shields (SS Only)

Before any racing event, remove the tire deflectors in the front of the vehicle, and replace the original deflector and splash shield with the tall deflector and small splash shield.

Caution
Race track driving with the original front disc brake splash shield and front tire deflector may result in brake pedal fade due to high rotor temperatures.

To install the tall deflector and small splash shield:

1. Remove the tire deflector.
2. Remove the front wheels.

3. Remove the calipers (3) from the knuckle.
4. Remove the brake rotors (2).
5. Remove the original front splash shields (1).
6. Remove the lower control arm deflectors.
7. Detach the wheel speed sensor harness clips from the lower control arm deflector.

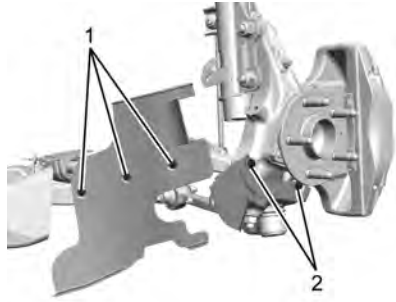

8. Install the small splash shields with two screws (2) per corner. Torque to 9 N•m (80 lb inch).

Caution

Failure to reattach the wheel speed sensor harness clips correctly could cause interference with the wheel speed sensor, and could damage the vehicle.

9. Re-attach the wheel speed sensor harness clips by pushing them from the bottom up, on the back tab. On the original deflector, the push pins are pushed from the top down.
10. Install the tall deflectors with three screws (1) per corner. Torque to 3.3 N•m (29 lb inch).

    When installing new control arms, torque the three screws to 4.5 N•m (40 lb inch).
11. Install the front rotors with one screw per corner. Torque to 9 N•m (80 lb inch).

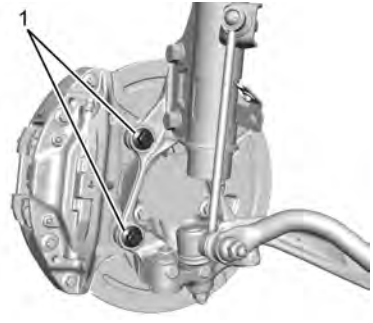

12. Apply liquid thread adhesive to the caliper bolts (GM Part No. 9985399 – Loctite 272 –

Goodwrench 12345493). Install the calipers with two screws (1) per corner. Torque the caliper bolts to 200 N•m (148 lb ft).

13. Reinstall the front wheels using the wheel nut torque. See *Capacities and Specifications* ⇨ *320*.

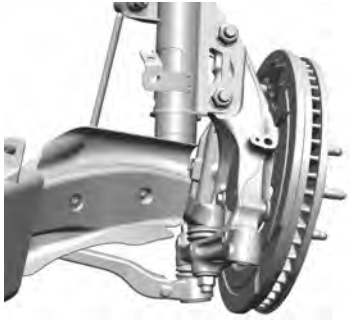

Caution

After a track event, remove the tall deflector and the small splash shield and reinstall the original deflector and splash shield.

(Continued)

Caution (Continued)

Failure to reinstall the original parts may lead to corrosion, loss of output, noise, premature brake pad and rotor wear, reduced high-speed wet braking, and damage to the tall deflector.

14. After a track event, repeat the steps to reinstall the original lower control arm deflectors and splash shields.
15. Reinstall the tire deflectors.

Custom Launch Control (If Equipped)

Custom Launch Control allows the following parameters for Launch Control to be modified:

- Launch RPM
- Slip Target (5%–15%)
- Surface Type

To adjust the Launch RPM, all of these conditions must be met:

- The vehicle must be in Track Mode. See “Track Mode” under *Driver Mode Control* ⇨ *196*.
- Performance Traction Management (PTM) Mode must be enabled. For convertibles, and SS equipped with 10-speed automatic, Competitive Driving Mode must be enabled. See *Driver Mode Control* ⇨ *196*.
- The steering wheel must be straight.
- The driver door must be closed.
- The transmission must be in a gear other than R (Reverse). It will work in P (Park) or N (Neutral).
- The parking brake must not be engaged.

For more information on Competitive Driving Mode, see *Competitive Driving Mode (SS, ZL1 and 1LE Models Only)* ⇨ *200*.

1. Using the buttons on the right side of the steering wheel, press ◁ to open the top level DIC menu. Use ▽ to scroll down to Options and press SEL.

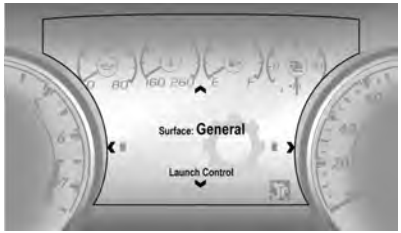

2. Use △ or ▽ to navigate to the Launch Control menu.

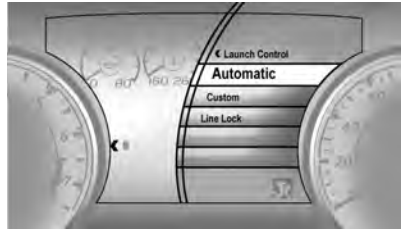

3. Use ▷ to open the Options menu.

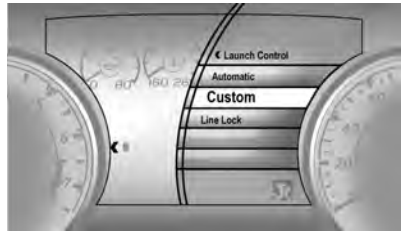

4. Use ▽ or △ to highlight Custom.

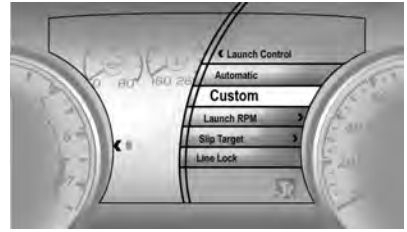

5. Press SEL to select Custom.

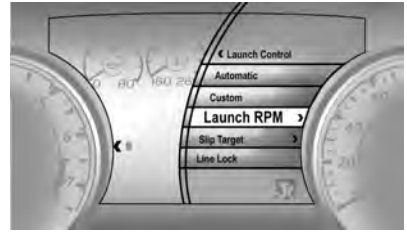

6. Scroll down to Launch RPM using ▽.
7. Press SEL.

8. Adjust the desired RPM using △ or ▽:

   1800–4000 RPM for manual transmissions and 1200–2400 for automatic.

9. Press SEL to confirm the desired RPM.

Manual Transmission

10. In this example, Launch Control is set to custom desired settings.

    - Manual Trans: Apply full throttle to activate Launch Control and quickly release the clutch pedal to launch the vehicle.

Automatic Transmission

- Auto Trans: Firmly press and hold the brake pedal to activate Launch Control.

11. Auto Trans Only - Quickly apply full throttle. Release the brake pedal to launch the vehicle.

Line Lock (If Equipped)

⚠ Warning

The vehicle may move unexpectedly when using Line Lock, which could cause injury to persons or property located nearby. Only use Line Lock on a closed track where there is a large clear area around all sides of the vehicle. Be ready to apply the brakes immediately if the vehicle begins to move. Do not use Line Lock in an area that is accessible to the public or where people or property are located near the vehicle.

Caution

Attempting to shift when the drive wheels are spinning and do not have traction may cause damage to the transmission. Damage caused by misuse of the vehicle

(Continued)

Caution (Continued)

is not covered by the vehicle warranty. Do not attempt to shift when the drive wheels do not have traction.

Line Lock allows for locking the front brakes independently of the rear brakes. This allows the rear tires to spin when the throttle is applied.

To enter Line Lock, all of these conditions must be met:

- The vehicle must be in Track Mode.
- Performance Traction Management (PTM) Mode must be enabled. For convertibles, Competitive Driving Mode must be enabled.
- The steering wheel must be straight.
- The driver door must be closed.
- The vehicle must be in D (Drive) for an automatic transmission or 1 (First) gear for a manual transmission.
- The parking brake must not be engaged.
- The vehicle must be stopped on level ground. The accelerator pedal must not be applied.

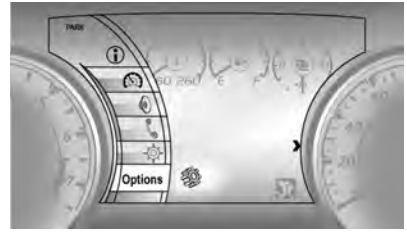

1. Using the buttons on the right side of the steering wheel, press ◁ to open the top level DIC menu. Use ▽ to scroll down to Options and press SEL.

2. Use △ or ▽ to navigate to the Launch Control menu.

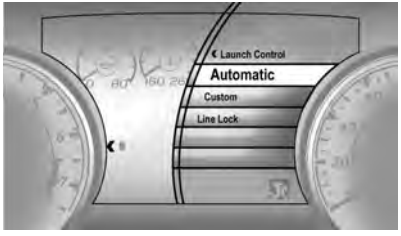

3. Use ▷ to open the Launch Control menu.

   Select Automatic or Custom.

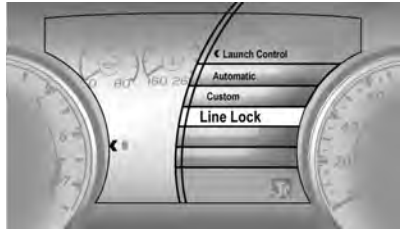

4. Use ▽ to highlight Line Lock.
5. Press SEL to select Line Lock.

6. Press the brake pedal firmly to move the bar graph to 100%.

7. Release the brake pedal.

8. There are 15 seconds to complete the burnout and exit.
9. To release the brakes and roll out, press and SEL at the same time.

If the burnout is not completed in 15 seconds, torque will be reduced to idle, the parking brake will be

applied, Line Lock releases, and Custom Launch Control will be disabled.

Ensure the parking brake is disengaged to re-enter Launch Control.

Driving on Wet Roads

Rain and wet roads can reduce vehicle traction and affect your ability to stop and accelerate. Always drive slower in these types of driving conditions and avoid driving through large puddles and deep-standing or flowing water.

⚠ Warning

Wet brakes can cause crashes. They might not work as well in a quick stop and could cause pulling to one side. You could lose control of the vehicle.

After driving through a large puddle of water or a car/vehicle wash, lightly apply the brake pedal until the brakes work normally.

Flowing or rushing water creates strong forces. Driving through flowing water could cause the vehicle to be carried away. If this happens, you and other vehicle occupants could drown. Do not ignore police warnings and be very cautious about trying to drive through flowing water.

Hydroplaning

Hydroplaning is dangerous. Water can build up under the vehicle's tires so they actually ride on the water. This can happen if the road is wet enough and you are going fast enough. When the vehicle is hydroplaning, it has little or no contact with the road.

There is no hard and fast rule about hydroplaning. The best advice is to slow down when the road is wet.

Other Rainy Weather Tips

Besides slowing down, other wet weather driving tips include:

- Allow extra following distance.
- Pass with caution.
- Keep windshield wiping equipment in good shape.
- Keep the windshield washer fluid reservoir filled.
- Have good tires with proper tread depth. See *Tires* ⇨ *259*.
- Turn off cruise control.

Hill and Mountain Roads

Driving on steep hills or through mountains is different than driving on flat or rolling terrain. Tips include:

- Keep the vehicle serviced and in good shape.
- Check all fluid levels and brakes, tires, cooling system, and transmission.
- Shift to a lower gear when going down steep or long hills.

⚠ Warning

Using the brakes to slow the vehicle on a long downhill slope can cause brake overheating, can reduce brake performance, and could result in a loss of braking. Shift the transmission to a lower gear to let the engine assist the brakes on a steep downhill slope.

⚠ Warning

Coasting downhill in N (Neutral) or with the ignition off is dangerous. This can cause overheating of the brakes and

(Continued)

Warning (Continued)

loss of steering assist. Always have the engine running and the vehicle in gear.

- Drive at speeds that keep the vehicle in its own lane. Do not swing wide or cross the center line.
- Be alert on top of hills; something could be in your lane (e.g., stalled car, crash).
- Pay attention to special road signs (e.g., falling rocks area, winding roads, long grades, passing or no-passing zones) and take appropriate action.

Winter Driving

Driving on Snow or Ice

Snow or ice between the tires and the road creates less traction or grip, so drive carefully. Wet ice can occur at about 0 °C (32 °F) when freezing rain begins to fall. Avoid driving on wet ice or in freezing rain until roads can be treated.

For Slippery Road Driving:

- Accelerate gently. Accelerating too quickly causes the wheels to spin and makes the surface under the tires slick.
- Turn on Traction Control. See *Traction Control/Electronic Stability Control* ⇨ *194*.
- The Antilock Brake System (ABS) improves vehicle stability during hard stops, but the brakes should be applied sooner than when on dry pavement. See *Antilock Brake System (ABS)* ⇨ *191*.
- Allow greater following distance and watch for slippery spots. Icy patches can occur on otherwise clear roads in shaded areas. The surface of a curve or an overpass can remain icy when the surrounding roads are clear. Avoid sudden steering maneuvers and braking while on ice.

- Turn off cruise control.

Blizzard Conditions

Stop the vehicle in a safe place and signal for help. Stay with the vehicle unless there is help nearby.
If possible, use Roadside Assistance. See *Roadside Assistance Program* ⇨ *328*. To get help and keep everyone in the vehicle safe:

- Turn on the hazard warning flashers.
- Tie a red cloth to an outside mirror.

⚠ Warning

Snow can trap engine exhaust under the vehicle. This may cause exhaust gases to get inside. Engine exhaust contains carbon monoxide (CO), which cannot be seen or smelled. It can cause unconsciousness and even death.

(Continued)

Warning (Continued)

If the vehicle is stuck in snow:

- Clear snow from the base of the vehicle, especially any blocking the exhaust pipe.
- Open a window about 5 cm (2 in) on the vehicle side that is away from the wind, to bring in fresh air.
- Fully open the air outlets on or under the instrument panel.
- Adjust the climate control system to circulate the air inside the vehicle and set the fan speed to the highest setting. See “Climate Control Systems.”

For more information about CO, see *Engine Exhaust* ⇨ *182*.

To save fuel, run the engine for short periods to warm the vehicle and then shut the engine off and partially close the window. Moving about to keep warm also helps.

If it takes time for help to arrive, when running the engine, push the accelerator pedal slightly so the engine runs faster than the idle speed. This keeps the battery charged to restart the vehicle and to signal for help with the headlamps. Do this as little as possible, to save fuel.

If the Vehicle Is Stuck

Slowly and cautiously spin the wheels to free the vehicle when stuck in sand, mud, ice, or snow.

If stuck too severely for the traction system to free the vehicle, turn the traction system off and use the rocking method. See *Traction Control/Electronic Stability Control* ⇨ *194*.

⚠ Warning

If the vehicle's tires spin at high speed, they can explode, and you or others could be injured. The vehicle can overheat, causing an

(Continued)

Warning (Continued)

engine compartment fire or other damage. Spin the wheels as little as possible and avoid going above 56 km/h (35 mph).

Rocking the Vehicle to Get it Out

Turn the steering wheel left and right to clear the area around the front wheels. Turn off any traction system. Shift back and forth between R (Reverse) and a low forward gear, spinning the wheels as little as possible. To prevent transmission wear, wait until the wheels stop spinning before shifting gears. Release the accelerator pedal while shifting, and press lightly on the accelerator pedal when the transmission is in gear. Slowly spinning the wheels in the forward and reverse directions causes a rocking motion that could free the vehicle. If that does not get the vehicle out after a few tries, it might need to be towed out. If the vehicle does need to be towed out, see *Towing the Vehicle* ⇨ *292*.

Vehicle Load Limits

It is very important to know how much weight the vehicle can carry. This weight is called the vehicle capacity weight and includes the weight of all occupants, cargo, and all nonfactory-installed options. Two labels on the vehicle may show how much weight it may properly carry: the Tire and Loading Information label and the Certification label.

⚠ Warning

Do not load the vehicle any heavier than the Gross Vehicle Weight Rating (GVWR), or either the maximum front or rear Gross Axle Weight Rating (GAWR).

(Continued)

Warning (Continued)

This can cause systems to break and change the way the vehicle handles. This could cause loss of control and a crash. Overloading can also reduce stopping distance, damage the tires, and shorten the life of the vehicle.

Tire and Loading Information Label

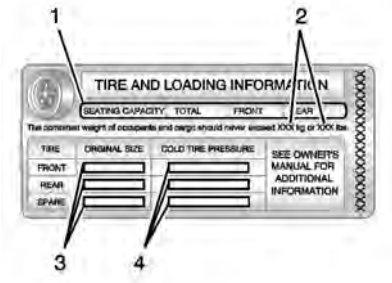

Label Example

A vehicle-specific Tire and Loading Information label is attached to the vehicle's center pillar (B-pillar). The Tire and Loading Information label shows the number of occupant seating positions (1), and the maximum vehicle capacity weight (2) in kilograms and pounds.

The Tire and Loading Information label also shows the tire size of the original equipment tires (3) and the recommended cold tire inflation pressures (4). For more information on tires and inflation see *Tires* ⇨ *259* and *Tire Pressure* ⇨ *267*.

There is also important loading information on the Certification label. It may show the Gross Vehicle Weight Rating (GVWR) and the Gross Axle Weight Rating (GAWR) for the front and rear axle. See “Certification Label” later in this section.

“Steps for Determining Correct Load Limit–

1. Locate the statement "The combined weight of occupants and cargo should never exceed XXX kg or XXX lbs." on your vehicle’s placard.
2. Determine the combined weight of the driver and passengers that will be riding in your vehicle.
3. Subtract the combined weight of the driver and passengers from XXX kg or XXX lbs.
4. The resulting figure equals the available amount of cargo and luggage load capacity. For example, if the "XXX" amount equals 1400 lbs. and there will be five 150 lb passengers in your vehicle, the amount of available cargo and luggage load capacity is 650 lbs. (1400-750 (5 x 150) = 650 lbs.)
5. Determine the combined weight of luggage and cargo being loaded on the vehicle. That weight may not safely exceed the available cargo and luggage load capacity calculated in Step 4.
6. If your vehicle will be towing a trailer, load from your trailer will be transferred to

your vehicle. Consult this manual to determine how this reduces the available cargo and luggage load capacity of your vehicle.”

This vehicle is neither designed nor intended to tow a trailer.

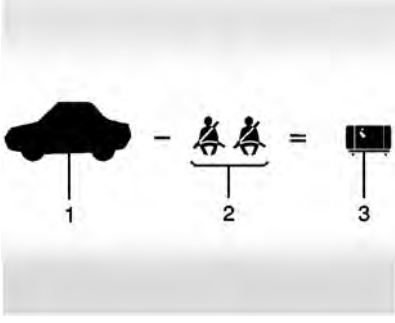

Example 1

1. Vehicle Capacity Weight for Example 1 = 453 kg (1,000 lbs).
2. Subtract Occupant Weight @ 68 kg (150 lbs) × 2 = 136 kg (300 lbs).
3. Available Occupant and Cargo Weight = 317 kg (700 lbs).

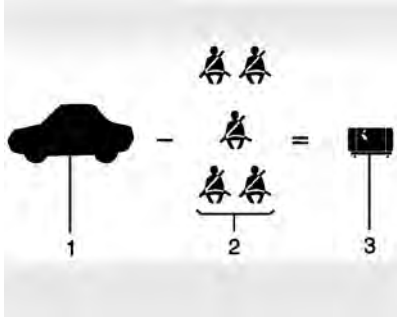

Example 2

1. Vehicle Capacity Weight for Example 2 = 453 kg (1,000 lbs).
2. Subtract Occupant Weight @ 68 kg (150 lbs) × 5 = 340 kg (750 lbs).
3. Available Cargo Weight = 113 kg (250 lbs).

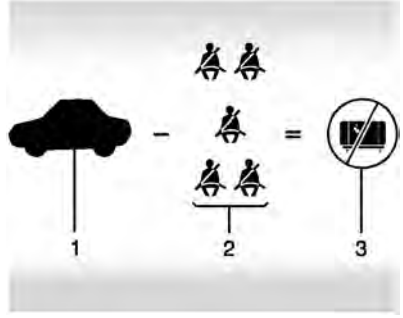

Example 3

1. Vehicle Capacity Weight for Example 3 = 453 kg (1,000 lbs).
2. Subtract Occupant Weight @ 91 kg (200 lbs) × 5 = 453 kg (1,000 lbs).
3. Available Cargo Weight = 0 kg (0 lbs).

Refer to the vehicle's Tire and Loading Information label for specific information about the vehicle's capacity weight and seating positions. The combined

weight of the driver, passengers, and cargo should never exceed the vehicle's capacity weight.

Certification Label

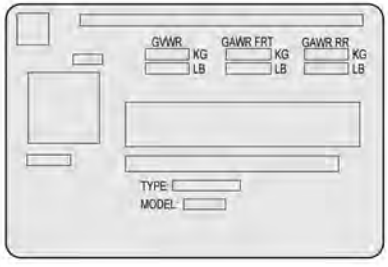

Label Example

A vehicle-specific Certification label is attached to the vehicle's center pillar (B-pillar). The label may show the gross weight capacity of the vehicle, called the Gross Vehicle Weight Rating (GVWR). The GVWR includes the weight of the vehicle, all occupants, fuel, and cargo.

⚠ Warning

Things inside the vehicle can strike and injure people in a sudden stop or turn, or in a crash.

- Put things in the cargo area of the vehicle. In the cargo area, put them as far forward as possible. Try to spread the weight evenly.
- Never stack heavier things, like suitcases, inside the vehicle so that some of them are above the tops of the seats.
- Do not leave an unsecured child restraint in the vehicle.
- Secure loose items in the vehicle.

(Continued)

Warning (Continued)

- Do not leave a seat folded down unless needed.

Starting and Operating

New Vehicle Break-In

Caution

Follow these recommended guidelines during the first 2 414 km (1,500 mi) of driving this vehicle. Parts have a break-in period and performance will be better in the long run.

- Avoid full throttle starts and abrupt stops.
- Do not exceed 4000 engine rpm.
- Avoid driving at any one constant speed, fast or slow.
- Do not drive above 129 km/h (80 mph).
- Avoid downshifting to brake or slow the vehicle when the engine speed will exceed 4000 rpm.

(Continued)

Caution (Continued)

- Do not let the engine labor. Never lug the engine in high gear at low speeds. With a manual transmission, shift to the next lower gear. This rule applies at all times, not just during the break-in period.
- Do not participate in racing events, sport driving schools, or similar activities during this break-in period.
- Check engine oil with every refueling and add if necessary. Oil and fuel consumption may be higher than normal during the first 2 414 km (1,500 mi).
- To break in new tires, drive at moderate speeds and avoid hard cornering for the first 322 km (200 mi). New

(Continued)

Caution (Continued)

tires do not have maximum traction and may tend to slip.

- New brake linings also need a break-in period. Avoid making hard stops during the first 322 km (200 mi). This is recommended every time brake linings are replaced.
- Should the vehicle be used for racing or competitive driving (after break-in), the rear axle lubricant must be replaced beforehand.

See *Track Events and Competitive Driving* ⇨ *157*.

Ignition Positions

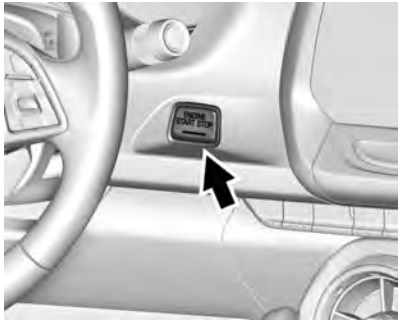

The vehicle has an electronic keyless ignition with pushbutton start.

The Remote Keyless Entry (RKE) transmitter must be in the vehicle for the system to operate. If the pushbutton start is not working, the vehicle may be near a strong radio antenna signal causing interference to the Keyless Access system. See *Remote Keyless Entry (RKE) System Operation* ⇨ *8*.

To shift out of P (Park), the vehicle must be on and the brake pedal must be applied.

Stopping the Engine/OFF (No Indicator Lights) : When the vehicle is stopped, press ENGINE START/STOP once to turn the engine off.

If the vehicle is in P (Park), the ignition will turn off, and Retained Accessory Power (RAP) will remain active. See *Retained Accessory Power (RAP)* ⇨ *179*.

Automatic Transmission

If the vehicle is not in P (Park), the ignition will return to ACC/ ACCESSORY and display a message in the Driver Information Center (DIC). When the vehicle is shifted into P (Park), the ignition system will turn OFF.

Manual Transmission

If the vehicle is stationary, the ignition will turn off, and Retained Accessory Power (RAP) will remain active. See *Retained Accessory Power (RAP)* ⇨ *179*.

Do not turn the engine off when the vehicle is moving. This will cause a loss of power assist in the brake and steering systems and disable the airbags.

If the vehicle must be shut off in an emergency:

1. Brake using a firm and steady pressure. Do not pump the brakes repeatedly. This may deplete power assist, requiring increased brake pedal force.
2. Shift the vehicle to N (Neutral). This can be done while the vehicle is moving. After shifting to N (Neutral), firmly apply the brakes and steer the vehicle to a safe location.
3. Come to a complete stop. Shift to P (Park) with an automatic transmission, or Neutral with a manual transmission. Turn the ignition off.
4. Set the parking brake. See *Electric Parking Brake* ⇨ *192*.

⚠ Warning

Turning off the vehicle while moving may cause loss of power assist in the brake and steering systems and disable the airbags. While driving, only shut the vehicle off in an emergency.

If the vehicle cannot be pulled over, and must be shut off while driving, press and hold ENGINE START/STOP for longer than two seconds, or press twice within five seconds.

ACC/ACCESSORY (Amber Indicator Light) : This mode allows the use of some electrical accessories when the engine is off.

With the ignition off, pressing the button one time without the brake pedal applied will place the ignition system in ACC/ACCESSORY.

The ignition will switch from ACC/ACCESSORY to OFF after five minutes to prevent battery rundown.

ON/RUN/START (Green Indicator Light) : This mode is for driving and starting. With the ignition off, and the brake pedal applied, pressing the button once will place the ignition system in ON/RUN/START. Once engine cranking begins, release the button. Engine cranking will continue until the engine starts. See *Starting the Engine* ⇨ *176*. The ignition will then remain on.

Service Mode

This power mode is available for service and diagnostics, and to verify the proper operation of the malfunction indicator lamp as may be required for emission inspection purposes. With the vehicle off, and the brake pedal not applied, pressing and holding ENGINE START/STOP for more than five seconds will place the vehicle in Service Mode. The instruments and audio systems will operate as they do in ON/RUN, but the vehicle will not be able to be driven. The engine will not start in Service Mode. Press the button again to turn the vehicle off.

Starting the Engine

Place the transmission in the proper gear.

Caution

If you add electrical parts or accessories, you could change the way the engine operates. Any resulting damage would not be covered by the vehicle warranty. See *Add-On Electrical Equipment* ⇨ *218*.

Automatic Transmission

Move the shift lever to P (Park) or N (Neutral). To restart the vehicle when it is already moving, use N (Neutral) only.

Caution

Do not try to shift to P (Park) if the vehicle is moving. If you do, you could damage the transmission. Shift to P (Park) only when the vehicle is stopped.

Manual Transmission

The shift lever should be in Neutral and the parking brake engaged. Hold the clutch pedal down to the floor, press the brake pedal, and start the engine.

Starting the Vehicle

The RKE transmitter must be inside the vehicle for the ignition to work.

Cell phone chargers can interfere with the operation of the Keyless Access system. Battery chargers should not be plugged in when starting or turning off the engine.

To start the vehicle:

1. For vehicles with an automatic transmission, press the brake pedal, then press ENGINE START/STOP on the instrument panel. For a manual transmission, place the shift lever in Neutral with the parking brake engaged. Hold the clutch pedal down to the floor, press the brake pedal, then press ENGINE START/STOP.

   If there is no RKE transmitter in the vehicle or if there is something causing interference with it, the Driver Information Center (DIC) will display a message.

2. When the engine begins cranking, let go of the button and the engine cranks automatically until it starts. If the battery in the RKE transmitter is weak, the DIC will display a message. The vehicle can still be driven.

   See “Starting the Vehicle with a Low Transmitter Battery” under *Remote Keyless Entry (RKE) System Operation* ⇨ *8*. If the RKE transmitter battery is dead, insert it into the rear cupholder to enable engine starting.

3. Do not race the engine immediately after starting it. Operate the engine and transmission gently until the oil warms up and lubricates all moving parts.

4. If the engine does not start and no DIC message is displayed, wait 15 seconds before trying again to let the cranking motor cool down.

   If the engine does not start after five to 10 seconds, especially in very cold weather (below −18 °C or 0 °F), it could be flooded with too much gasoline. Try pushing the accelerator pedal all the way to the floor while cranking for up to 15 seconds maximum. Wait at least 15 seconds between each try, to allow the cranking motor to cool down. When the engine starts, let go of the accelerator. If the vehicle starts briefly but then stops again, repeat these steps. This clears the extra gasoline from the engine.

Caution

Cranking the engine for long periods of time, by returning the ignition to the START position immediately after cranking has ended, can overheat and damage the cranking motor, and drain the battery. Wait at least 15 seconds between each try, to let the cranking motor cool down.

Stopping the Engine

If the vehicle has an automatic transmission, move the shift lever to P (Park) and press and hold ENGINE START/STOP on the instrument panel, until the engine shuts off. If the shift lever is not in P (Park), the engine shuts off and the ignition goes to ACC/ ACCESSORY. The DIC displays SHIFT TO PARK. Once the shift lever is moved to P (Park), the vehicle turns off.

If the vehicle has a manual transmission, before getting out of the vehicle, shift to 1 (First) or R (Reverse) and apply the parking brake. Then turn off the ignition off by pressing ENGINE START/STOP and release the clutch pedal when the engine has stopped.

If the RKE transmitter is not detected inside the vehicle when it is turned off the DIC displays a message.

Engine Heater

⚠ Warning

Do not plug in the engine block heater while the vehicle is parked in a garage or under a carport. Property damage or personal injury may result. Always park the vehicle in a clear open area away from buildings or structures.

If equipped, the engine heater can help in cold weather conditions at or below −18 °C (0 °F) for easier starting and better fuel economy during engine warm-up. Plug in the coolant heater at least four hours before starting the vehicle. An internal thermostat in the plug end of the cord will prevent engine heater operation at temperatures above −18 °C (0 °F).

Using the Engine Heater

1. Turn off the engine.
2. Open the hood and unwrap the electrical cord.

The electrical cord is on the passenger side of the engine compartment, next to the engine compartment fuse block.

Check the heater cord for damage. If it is damaged, do not use it. See your dealer for a replacement. Inspect the cord for damage yearly.

3. Plug it into a normal, grounded 110-volt AC outlet.

⚠ Warning

Improper use of the heater cord or an extension cord can damage the cord and may result in overheating and fire.

- Plug the cord into a three-prong electrical utility receptacle that is protected by a ground fault detection function. An ungrounded outlet could cause an electric shock.
- Use a weatherproof, heavy-duty, 15 amp-rated extension cord if needed. Failure to use the recommended extension cord in good operating

(Continued)

Warning (Continued)

condition, or using a damaged heater or extension cord, could make it overheat and cause a fire, property damage, electric shock, and injury.

- Do not operate the vehicle with the heater cord permanently attached to the vehicle. Possible heater cord and thermostat damage could occur.
- While in use, do not let the heater cord touch vehicle parts or sharp edges. Never close the hood on the heater cord.
- Before starting the vehicle, unplug the cord, reattach the cover to the plug, and securely fasten the cord. Keep the cord away from any moving parts.

4. Before starting the engine, be sure to unplug and store the cord as it was before to keep it away from moving engine parts. If you do not it could be damaged.

The length of time the heater should remain plugged in depends on several factors. Ask a dealer in the area where you will be parking the vehicle for the best advice on this.

Retained Accessory Power (RAP)

When the ignition is turned from on to off, the following features (if equipped) will continue to function for up to 10 minutes, or until the driver door is opened. These features will also work when the ignition is in RUN or ACC/ACCESSORY:

- Infotainment System
- Power Windows (during RAP this functionality will be lost when any door is opened)

- Sunroof (during RAP this functionality will be lost when any door is opened)
- Auxiliary Power Outlet
- Audio System
- OnStar System

Shifting Into Park

To shift into P (Park):

1. Hold the brake pedal down and set the parking brake.

   See *Electric Parking Brake* ⇨ *192*.

2. Hold the button on the shift lever and push the shift lever toward the front of the vehicle into P (Park).
3. Turn the ignition off.

Leaving the Vehicle with the Engine Running

⚠ Warning

It can be dangerous to leave the vehicle with the engine running. It could overheat and catch fire.

It is dangerous to get out of the vehicle if the shift lever is not fully in P (Park) with the parking brake firmly set. The vehicle can roll.

Do not leave the vehicle when the engine is running. If you have left the engine running, the vehicle can move suddenly. You or others could be injured. To be sure the vehicle will not move, even when you are on fairly level ground, always set the parking brake and move the shift lever to P (Park). See *Shifting Into Park* ⇨ *180*.

If you have to leave the vehicle with the engine running, the vehicle must be in P (Park) and the parking brake set.

Release the button and check that the shift lever cannot be moved out of P (Park).

Torque Lock

Torque lock is when the weight of the vehicle puts too much force on the parking pawl in the transmission. This happens when parking on a hill and shifting the transmission into P (Park) is not done properly and then it is difficult to shift out of P (Park). To prevent torque lock, set the parking brake and then shift into P (Park). To find out how, see “Shifting Into Park” previously in this section.

If torque lock does occur, the vehicle may need to be pushed uphill by another vehicle to relieve the parking pawl pressure, so you can shift out of P (Park).

Shifting out of Park

This vehicle is equipped with an electronic shift lock control system. The shift lock release is designed to

prevent movement of the shift lever out of P (Park), unless the ignition is on and the brake pedal is applied.

The shift lock release is always functional except in the case of an uncharged or low voltage (less than 9-volt) battery.

If the vehicle has an uncharged battery or a battery with low voltage, try charging or jump starting the battery. See *Jump Starting - North America* ⇨ *289*.

To shift out of P (Park):

1. Apply the brake pedal.
2. Turn the ignition on.
3. Release the parking brake. See *Electric Parking Brake* ⇨ *192*.
4. Press the shift lever button.
5. Move the shift lever to the desired position.

If still unable to shift out of P (Park):

1. Fully release the shift lever button.
2. Hold the brake pedal down and press the shift lever button again.
3. Move the shift lever to the desired position.

If the shift lever still cannot be moved from P (Park), see your dealer.

Parking (Manual Transmission)

⚠ Warning

If the vehicle has a manual transmission, never get out of the vehicle without first moving the shift lever into 1st or R (Reverse), setting the parking brake and turning the ignition off. The vehicle can roll, which could cause serious injury or death.

Parking over Things That Burn

⚠ Warning

Things that can burn could touch hot exhaust parts under the vehicle and ignite. Do not park over papers, leaves, dry grass, or other things that can burn.

Active Fuel Management

Vehicles with V6 and V8 engines and an automatic transmission have Active Fuel Management. This system allows the engine to operate on either all or four of its cylinders, depending on the driving conditions.

When less power is required, such as cruising at a constant vehicle speed, the system will operate in four cylinder mode, allowing the vehicle to achieve better fuel economy. When greater power demands are required, such as accelerating from a stop, passing,

or merging onto a freeway, the system will maintain full-cylinder operation.

Extended Parking

It is best not to park with the vehicle running. If the vehicle is left running, be sure it will not move and there is adequate ventilation. See *Shifting Into Park* ⇨ *180* and *Engine Exhaust* ⇨ *182*.

If the vehicle is left parked and running with the Remote Keyless Entry (RKE) transmitter outside the vehicle, it will continue to run for up to half an hour.

If the vehicle is left parked and running with the RKE transmitter inside the vehicle, it will continue to run for up to an hour.

The vehicle could turn off sooner if it is parked on a hill, due to lack of available fuel.

Automatic Transmission

The timer will reset if the vehicle is taken out of P (Park) while it is running.

Manual Transmission

The timer will reset if vehicle speed exceeds 4 km/h (2.5 mph).

Engine Exhaust

⚠ Warning

Engine exhaust contains carbon monoxide (CO), which cannot be seen or smelled. Exposure to CO can cause unconsciousness and even death.

Exhaust may enter the vehicle if:

- The vehicle idles in areas with poor ventilation (parking garages, tunnels, deep snow that may block underbody airflow or tail pipes).
- The exhaust smells or sounds strange or different.
- The exhaust system leaks due to corrosion or damage.
- The vehicle exhaust system has been modified, damaged, or improperly repaired.

(Continued)

Warning (Continued)

- There are holes or openings in the vehicle body from damage or aftermarket modifications that are not completely sealed.

If unusual fumes are detected or if it is suspected that exhaust is coming into the vehicle:

- Drive it only with the windows completely down.
- Have the vehicle repaired immediately.

Never park the vehicle with the engine running in an enclosed area such as a garage or a building that has no fresh air ventilation.

Running the Vehicle While Parked

It is better not to park with the engine running.

If the vehicle is left with the engine running, follow the proper steps to be sure the vehicle will not move. See *Shifting Into Park* ⇨ *180* and *Engine Exhaust* ⇨ *182*. If the vehicle has a manual transmission, see *Parking (Manual Transmission)* ⇨ *181*.

Automatic Transmission

The Driver Information Center (DIC) displays the current range selected in the lower right corner. If Manual Mode is active, M and the current gear selected is displayed. The DIC also displays the currently selected Drive Mode. When Tour Mode is selected, T is displayed. When Sport Mode is selected, S is displayed and if equipped Track Mode, Tr will be displayed.

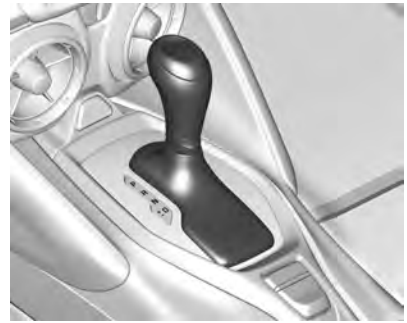

P : This position locks the drive wheels. Use P (Park) when starting the engine because the vehicle cannot move easily.

⚠ Warning

It is dangerous to get out of the vehicle if the shift lever is not fully in P (Park) with the parking brake firmly set. The vehicle can roll.

Do not leave the vehicle when the engine is running. If you have left the engine running, the vehicle can move suddenly. You or others could be injured. To be sure the vehicle will not move, even when you are on fairly level ground, always set the parking brake and move the shift lever to P (Park). See *Shifting Into Park* ⇨ *180*.

Make sure the shift lever is fully in P (Park) before starting the engine. The vehicle has an automatic transmission shift lock control system. The regular brake must be fully applied first and then the shift lever button must be pressed before shifting from P (Park) when the ignition is on. If you cannot shift out of P (Park), ease pressure on the shift lever, then push the shift lever all the way into P (Park) as you maintain brake application. Then press the shift lever button and move the shift lever into another gear. See *Shifting out of Park* ⇨ *180*.

R : Use this gear to back up.

Caution

Shifting to R (Reverse) while the vehicle is moving forward could damage the transmission. The repairs would not be covered by the vehicle warranty. Shift to R (Reverse) only after the vehicle is stopped.

To rock the vehicle back and forth to get out of snow, ice, or sand without damaging the transmission, see *If the Vehicle Is Stuck* ⇨ *169*.

N : In this position, the engine does not connect with the wheels. To restart the engine when the vehicle is already moving, use N (Neutral) only.

⚠ Warning

Shifting into a drive gear while the engine is running at high speed is dangerous. Unless your foot is firmly on the brake pedal, the vehicle could move very rapidly. You could lose control and hit people or objects. Do not shift into a drive gear while the engine is running at high speed.

Caution

Shifting out of P (Park) or N (Neutral) with the engine running at high speed may damage the transmission. The repairs would not be covered by

(Continued)

Caution (Continued)

the vehicle warranty. Be sure the engine is not running at high speed when shifting the vehicle.

Caution

A transmission hot message may display if the automatic transmission fluid is too hot. Driving under this condition can damage the vehicle. Stop and idle the engine to cool the automatic transmission fluid. This message clears when the transmission fluid has cooled sufficiently.

D : This position is for normal driving. If more power is needed for passing, press the accelerator pedal down.

Powertrain Braking

When driving on steep descents with the shift lever in D (Drive) where frequent braking is required, the transmission will shift down a gear to help hold vehicle speed and reduce brake wear. If the brake continues to be pressed, the transmission will downshift until the correct gear for optimal braking is reached.

If the road levels out and the accelerator pedal is pressed, the transmission will upshift until the appropriate gear is reached.

Caution

If the vehicle does not shift gears, the transmission could be damaged. Have the vehicle serviced right away.

Performance Shifting

While driving in Sport Mode (L4, if equipped or V6, if equipped), or Sport Mode and Track Mode (V8, if equipped), if Tap Shift has not been activated, the transmission determines when the vehicle is being driven in a competitive manner. The transmission may remain in a gear longer than it would in the normal driving mode based on throttle input and vehicle lateral acceleration. If there is a rapid reduction in throttle from a heavy throttle position at high rpm, the transmission will maintain the current gear up to near redline rpm. While braking, the transmission will automatically downshift to the next lower gear keeping engine speed above approximately 3000 rpm.
If the vehicle is then driven for a short time at a steady speed, and without high cornering loads, the transmission will upshift one gear at a time until the highest available gear is reached. After shifting to the highest available gear, the transmission will return to normal Sport Mode shifting.

Manual Mode

Driver Shift Control (DSC)

Caution
Driving with the engine at a high rpm without upshifting while using Driver Shift Control (DSC), could damage the vehicle. Always upshift when necessary while using DSC.

DSC allows shifting an automatic transmission similar to a manual transmission. To use the DSC feature:

1. Move the shift lever to the left from D (Drive) into the side gate marked with +/−.
2. Press the shift lever forward to upshift or rearward to downshift.

While using the DSC feature, the vehicle will have firmer, quicker shifting. You can use this for sport driving or when climbing or descending hills, to stay in gear longer, or to downshift for more power or engine braking.

The transmission will only allow you to shift into gears appropriate for the vehicle speed and engine revolutions per minute (rpm). The transmission will not automatically shift to the next lower gear if the engine rpm is too high, nor to the next higher gear when the maximum engine rpm is reached.

While in the DSC mode, the transmission will automatically downshift as the vehicle comes to a stop. This will allow for more power during take-off.

Tap Shift

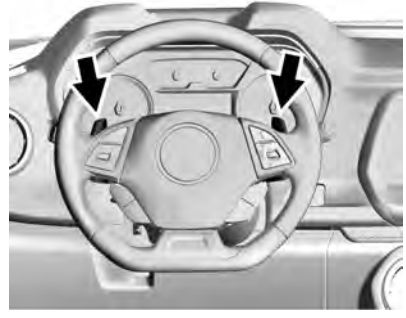

Tap Shift allows you to manually control the automatic transmission. To use Tap Shift, the shift lever must be in DSC mode. Vehicles with this feature have indicators on the steering wheel. The paddles are on the back of the steering wheel. Tap the left paddle (−) to downshift, and the right paddle (+) to upshift. The

Driver Information Center (DIC) display indicates the gear the vehicle is in.

Holding the left paddle for an extended time will downshift the transmission to the lowest available gear.

While in Manual Mode, the transmission will prevent shifting to a lower gear if the engine speed is too high. If the tap down − (Minus) paddle is held while the vehicle slows down, the M in the DIC will flash, and the downshift will be allowed when vehicle speed is low enough. Continuing to hold the tap down − (Minus) paddle will not cause the transmission to continue downshifting. Each downshift must be requested separately by releasing and reapplying the tap down − (Minus) paddle.

Head-Up Display (HUD)

Vehicles equipped with a Head-Up Display (HUD) may also have performance shift timing lights across the top of the display. The rows of lights get closer together as the maximum shift point gets closer. Shift the transmission before the lights come together in the display. Shift immediately if the lights are flashing.

See *Head-Up Display (HUD)* ⇨ *120*.

Temporary Tap Shift Mode allows brief entry into Tap Shift Mode while in D (Drive). Tapping either the upshift or downshift control will place the transmission in Tap Shift Mode. Exit Tap Shift Mode by holding the upshift control for two seconds. The system will return to automatic shifting after seven seconds of driving at a steady speed, or when the vehicle comes to a stop.

This may be used for sport driving or when climbing or descending hills, to stay in gear longer, or to downshift for more power or engine braking. The transmission will only allow you to shift into gears appropriate for the vehicle speed and engine revolutions per minute (rpm). The transmission will not automatically shift to the next higher gear if the engine rpm is too high. If shifting is prevented for any reason, the gear displayed in the DIC will blink several times, indicating that the transmission has not shifted gears. While in the Tap Shift Mode, the transmission will not automatically downshift on hard acceleration.

Manual Transmission

Shift Pattern – V8 Engine

Shift Pattern – L4 and V6 Engines

These are the shift patterns for the 6-speed manual transmissions.

Caution

The message MANUAL TRANSMISSION — RELEASE CLUTCH PEDAL displays and a chime sounds if the manual transmission clutch pedal is partially applied for an extended period of time while the vehicle is being driven. Driving with the clutch pedal applied can reduce

(Continued)

Caution (Continued)

the life of the clutch and/or damage it. Fully release the clutch pedal after each gear change.

Caution

The message REDUCED PERFORMANCE — REDUCE CLUTCH USE displays and engine torque is momentarily limited if excessive manual transmission clutch slip is detected while the clutch pedal is fully released. This could be caused by a hot clutch. Apply less pressure on the accelerator pedal when accelerating from a stop. Also, fully release the accelerator pedal during gear changes. This will allow the clutch to cool and should prevent further clutch slip while the clutch pedal is fully

(Continued)

Caution (Continued)

released. If this message displays repeatedly, see your dealer. Repeated clutch slip could cause permanent damage.

Caution

The message TRANSMISSION IS HOT — SLOW DOWN displays and a chime sounds if the manual transmission fluid is hot and vehicle speed is high. Driving with the manual transmission fluid temperature high can damage the vehicle. Drive at a slower speed to cool the manual transmission fluid. This message clears when the vehicle has slowed sufficiently or if the manual transmission fluid has cooled sufficiently.

To operate the transmission:

1 : Press the clutch pedal to the floor and shift into 1 (First). Then slowly let up on the clutch pedal while pressing the accelerator pedal.

Shift into 1 (First) when going less than 65 km/h (40 mph). If the vehicle comes to a complete stop and it is hard to shift into 1 (First), put the shift lever in Neutral and let up on the clutch. Press the clutch pedal back down to the floor. Then shift into 1 (First).

2 : Press the clutch pedal to the floor while letting up on the accelerator pedal and shift into 2 (Second). Then, slowly let up on the clutch pedal while pressing the accelerator pedal.

3, 4, 5, and 6 : Shift into 3 (Third), 4 (Fourth), 5 (Fifth), and 6 (Sixth) the same way as for 2 (Second). Slowly let up on the clutch pedal while pressing the accelerator pedal.

To stop, let up on the accelerator pedal and press the brake pedal. Just before the vehicle stops, press the clutch pedal and the brake pedal, and shift to Neutral.

Neutral : Use this position when starting or idling the engine. The shift lever is in Neutral when it is centered in the shift pattern, not in any gear.

R : To back up, press the clutch pedal to the floor and shift into R (Reverse). Let up on the clutch pedal slowly while pressing the accelerator pedal.

One to Four Shift Message (V8 Only)

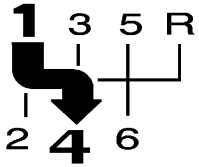

When this message comes on, the vehicle can only be shifted from 1 (First) to 4 (Fourth) instead of 1 (First) to 2 (Second). The message will display in the Driver Information Center (DIC).

Complete the shift into 4 (Fourth) to turn off this feature. This helps to get the best possible fuel economy.

After shifting to 4 (Fourth), downshift to a lower gear, if desired.

Caution

Forcing the shift lever into any gear except 4 (Fourth) when the 1-4 SHIFT message comes on may damage the transmission. Shift only from 1 (First) to 4 (Fourth) when the message comes on.

This message will come on when:

- The engine coolant temperature is higher than 76 °C (169 °F).
- The vehicle is accelerating from a stop and going 24 to 31 km/h (15 to 19 mph).
- The vehicle is at 33% throttle or less.

Once displayed, the message will remain in the DIC for two seconds, even if the conditions for skip shift are no longer satisfied.

Vehicles equipped with a Head-Up Display (HUD) may also have performance shift timing lights across the top of the display. The rows of lights get closer together as the maximum shift point gets closer. Shift the transmission before the lights come together in the display. Shift immediately if the lights are flashing.

See *Head-Up Display (HUD)* ⇨ *120*.

Active Rev Match

Vehicles equipped with a V8 engine and a manual transmission have Active Rev Match (ARM). ARM aids in smoother shifting by matching the engine speed to the next selected gear. By monitoring shift lever and clutch operation, ARM adjusts engine speed to match a calibrated value based on gear selection. On upshifts and downshifts, engine speed will be decreased and increased to match vehicle road speed and transmission gear position. ARM is maintained while the clutch pedal is pressed, but will deactivate if the shift lever is left in the Neutral position.

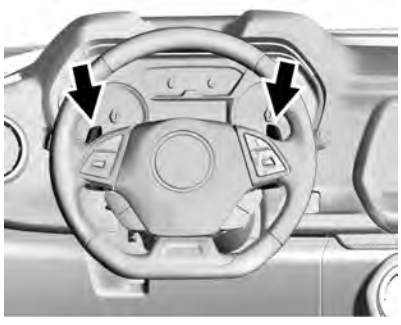

The system is activated and deactivated by pressing either of the paddles marked REV MATCH on the steering wheel. The system must be activated with each new ignition cycle.

A gear indicator in the instrument cluster displays the current gear selected:

- When ARM is activated, the gear number is amber.
- When ARM is deactivated, the gear number is white.
- If no gear number is displayed while the shift lever is in gear, service is required. ARM will be disabled, and the malfunction indicator lamp will be on. See *Malfunction Indicator Lamp* ⇨ *110*. The clutch and manual transmission will continue to operate normally.

ARM will also:

- Only be active above 25 km/h (16 mph).
- Only match engine speed up to 5400 rpm.
- Not operate when the accelerator pedal is applied.
- Be disabled when the coolant temperature is below 0 °C (32 °F).

Brakes

Antilock Brake System (ABS)

The Antilock Brake System (ABS) helps prevent a braking skid and maintain steering while braking hard.

ABS performs a system check when the vehicle is first driven.
A momentary motor or clicking noise may be heard while this test is going on, and the brake pedal may move slightly. This is normal.

If there is a problem with ABS, this warning light stays on. See *Antilock Brake System (ABS) Warning Light* ⇨ *113*.

ABS does not change the time needed to get a foot on the brake pedal and does not always decrease stopping distance. If you get too close to the vehicle ahead, there will not be enough time to apply the brakes if that vehicle suddenly slows or stops. Always leave enough room ahead to stop, even with ABS.

Using ABS

Do not pump the brakes. Just hold the brake pedal down firmly. Hearing or feeling ABS operate is normal.

Braking in Emergencies

ABS allows steering and braking at the same time. In many emergencies, steering can help even more than braking.

Electric Parking Brake

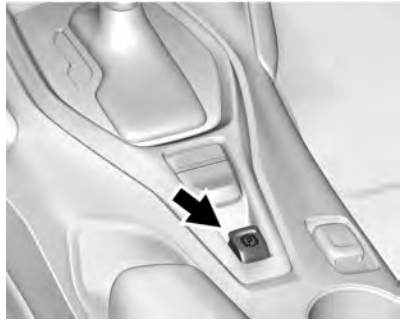

The vehicle has an Electric Parking Brake (EPB). The EPB can always be activated, even if the ignition is off. To prevent draining the battery, avoid repeated cycles of the EPB system when the engine is not running.

The system has a (P) or PARK Electric Parking Brake light, and a (P) Service Parking Brake light. See *Electric Parking Brake Light* ⇨ *112* and *Service Electric Parking Brake Light* ⇨ *113*.

Before leaving the vehicle, check for the (P) or PARK light to ensure that the parking brake is applied.

EPB Apply

To apply the EPB:

1. Be sure the vehicle is at a complete stop.
2. Lift up the EPB switch momentarily.

The (P) or PARK light will flash and then stay on once the EPB is fully applied. If the (P) or PARK light flashes continuously, then the EPB is only partially applied or there is a problem with the EPB. A DIC message will display. Release the EPB and try to apply it again. If the light does not come on, or keeps flashing, have the vehicle serviced.

Do not drive the vehicle if the (P) or PARK light is flashing. See your dealer. See *Electric Parking Brake Light* ⇨ *112*.

If the light is on, pull the EPB switch and hold it. Continue to hold the switch until the or PARK light remains on. If the light remains on, see your dealer.

If the EPB is applied while the vehicle is moving, the vehicle will decelerate as long as the switch is pulled. If the switch is pulled until the vehicle comes to a stop, the EPB will remain applied.

The vehicle may automatically apply the EPB in some situations when the vehicle is not moving. This is normal, and is done to periodically check the correct operation of the EPB system.

If the EPB fails to apply, block the rear wheels to prevent vehicle movement.

EPB Release

To release the EPB:

1. Turn the ignition on or to ACC/ ACCESSORY.
2. Apply and hold the brake pedal.
3. Press the EPB switch momentarily.

The EPB is released when the or PARK light is off.

If the light is on, release the EPB by pressing and holding the EPB switch. Continue to hold the switch until the or PARK light is off. If either light stays on after release is attempted, see your dealer.

Caution
Driving with the parking brake on can overheat the brake system and cause premature wear or damage to brake system parts. Make sure that the parking brake is fully released and the brake warning light is off before driving.

Automatic EPB Release

The EPB will automatically release if the vehicle is running, placed into gear, and an attempt is made to drive away. Avoid rapid acceleration when the EPB is applied, to preserve parking brake lining life.

The EPB can also be used to prevent roll back for vehicles with a manual transmission taking off on a hill. When no roll back is desired, an applied EPB will allow both feet to be used for the clutch and accelerator pedals in preparation for starting the vehicle moving in the intended direction. In this case, there is no need to press the switch to release the EPB.

Brake Assist

Brake Assist detects rapid brake pedal applications due to emergency braking situations and provides additional braking to activate the Antilock Brake System (ABS) if the brake pedal is not pushed hard enough to activate ABS normally. Minor noise, brake pedal pulsation, and/or pedal movement during this time may occur. Continue to apply the brake

pedal as the driving situation dictates. Brake Assist disengages when the brake pedal is released.

Hill Start Assist (HSA)

⚠ Warning

Do not rely on the HSA feature. HSA does not replace the need to pay attention and drive safely. You may not hear or feel alerts or warnings provided by this system. Failure to use proper care when driving may result in injury, death, or vehicle damage. See *Defensive Driving* ⇨ *154*.

When the vehicle is stopped on a grade, Hill Start Assist (HSA) temporarily prevents the vehicle from rolling in an unintended direction during the transition from brake pedal release to accelerator pedal apply. The brakes release when the accelerator pedal is applied or automatically release after a few seconds. The brakes may also release under other conditions. Do not rely on HSA to hold the vehicle.

HSA is available when the vehicle is facing uphill in a forward gear, or when facing downhill in R (Reverse). The vehicle must come to a complete stop on a grade for HSA to activate.

Ride Control Systems

Traction Control/ Electronic Stability Control

System Operation

The vehicle has a Traction Control System (TCS) and StabiliTrak/ Electronic Stability Control (ESC). These systems help limit wheel slip and assist the driver in maintaining control, especially on slippery road conditions.

TCS activates if it senses that any of the drive wheels are spinning or beginning to lose traction. When this happens, TCS applies the brakes to the spinning wheels and reduces engine power to limit wheel spin.

StabiliTrak/ESC activates when the vehicle senses a difference between the intended path and the direction the vehicle is actually traveling. StabiliTrak/ESC selectively applies braking pressure to any one of the

vehicle wheel brakes to assist the driver in keeping the vehicle on the intended path.

If cruise control is being used and traction control or StabiliTrak/ESC begins to limit wheel spin, cruise control will disengage. Cruise control may be turned back on when road conditions allow.

Both systems come on automatically when the vehicle is started and begins to move. The systems may be heard or felt while they are operating or while performing diagnostic checks. This is normal and does not mean there is a problem with the vehicle.

It is recommended to leave both systems on for normal driving conditions, but it may be necessary to turn TCS off if the vehicle gets stuck in sand, mud, ice, or snow. See *If the Vehicle Is Stuck* ⇨ *169* and “Turning the Systems Off and On” later in this section.

The indicator light for both systems is in the instrument cluster. This light will:

- Flash when TCS is limiting wheel spin
- Flash when StabiliTrak/ESC is activated
- Turn on and stay on when either system is not working

If either system fails to turn on or to activate, a message displays in the Driver Information Center (DIC), and comes on and stays on to indicate that the system is inactive and is not assisting the driver in maintaining control. The vehicle is safe to drive, but driving should be adjusted accordingly.

If comes on and stays on:

1. Stop the vehicle.
2. Turn the engine off and wait 15 seconds.
3. Start the engine.

Drive the vehicle. If comes on and stays on, the vehicle may need more time to diagnose the problem. If the condition persists, see your dealer.

Turning the Systems Off and On

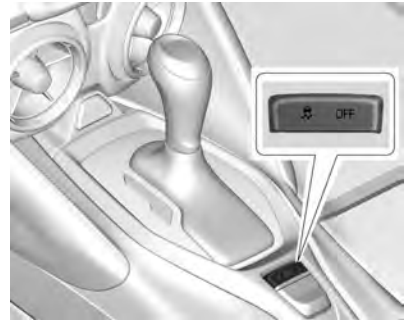

Caution
Do not repeatedly brake or accelerate heavily when TCS is off. The vehicle driveline could be damaged.

To turn off only TCS, press and release . The traction off light displays in the instrument cluster.

To turn TCS on again, press . The traction off light displayed in the instrument cluster will turn off.

If TCS is limiting wheel spin when is pressed, the system will not turn off until the wheels stop spinning.

To turn off both TCS and StabiliTrak/ESC, press and hold until the traction off light and StabiliTrak/ESC OFF light come on and stay on in the instrument cluster.

To turn TCS and StabiliTrak/ESC on again, press . The traction off light and StabiliTrak/ESC OFF light in the instrument cluster turn off.

Adding accessories can affect the vehicle performance. See *Accessories and Modifications* ⇨ *221*.

Engine Drag Control (EDC)

EDC improves vehicle stability by sensing if there is a difference in speed between the free rolling front wheels and the rear drive wheels that often occurs when the driver takes their foot off the accelerator pedal on slippery surfaces (snow, ice, etc.). When this is detected, EDC sends more torque to the rear wheels to make sure all four wheels are spinning at similar speeds, making the vehicle more stable.

Driver Mode Control

Driver Mode Control adds a sportier feel, provide a more comfortable ride, or assist in different weather conditions or terrain. This system simultaneously changes the software calibration of various sub-systems to optimize driving performance. Depending on the option package, available features, and mode selected, the exhaust, suspension, steering, and powertrain will change calibrations to achieve the desired mode characteristics. If the vehicle is equipped with Magnetic Ride Control, selecting the various Driver Modes adjusts the ride of the vehicle to enhance the ride performance for the road conditions and the selected mode.

While in the Sport and/or Track Modes, the vehicle monitors driving behavior and automatically enables Performance Shift Features in the automatic transmission when spirited driving is detected. These features maintain lower transmission gears to increase available engine braking and improve acceleration response. The vehicle will exit these features and

return to normal operation after a short period when no spirited driving is detected.

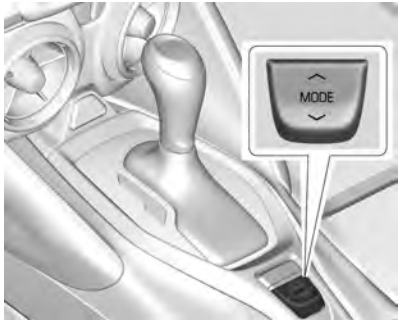

Driver Mode Control Switch

The Driver Mode Control has three or four modes: Tour, Sport, Snow/Ice, and Track. Press ∧ or ∨ on the MODE switch on the center console to make a mode selection. Pressing the switch will display the moding menu in the instrument cluster with all available ride modes. Every switch press will select and activate the next available mode. When Sport, Snow/Ice, or Track Mode is selected, a unique and persistent indicator will be displayed in the instrument cluster.

Tour Mode

Use for normal city and highway driving to provide a smooth, soft ride. This setting provides a balanced setting between comfort and handling. This is the standard mode.

Sport Mode

Use where road conditions or personal preference demand a more controlled response.

When Sport Mode is selected, the transmission may downshift to a lower gear for better performance. The transmission will continue to shift automatically but can hold a lower gear longer than it would in the Tour Mode based on braking, throttle input, and vehicle lateral acceleration. See *Automatic Transmission* ⇨ *183*. The steering will change to provide more precise control. If the vehicle has Magnetic Ride Control, the suspension will change to provide better cornering performance. If the vehicle is equipped with Active Exhaust, the exhaust valves will open earlier and more often. Competitive Driving Mode can be accessed through this mode by pressing OFF on the console twice.

This Competitive Driving Mode is only on SS, 1LE, and ZL1 vehicles. For example, a vehicle with a V6 engine and automatic transmission will have Sport Mode, but will not be able to access Competitive Driving Mode.

Snow/Ice Mode

If equipped, use when more traction is needed during slippery conditions. The automatic transmission will upshift normally when the vehicle is moving. The acceleration will adjust to help provide a smoother launch. The automatic transmission will also shift differently to assist in maintaining traction.

This feature is not intended for use when the vehicle is stuck in sand, mud, ice, snow, or gravel. If the vehicle becomes stuck, see *If the Vehicle Is Stuck* ⇨ *169*.

Track Mode

If equipped, use when maximum vehicle handling is desired.

When Track Mode is selected, the transmission may downshift to a lower gear for better performance. The automatic transmission and steering will function similar to Sport Mode.

The accelerator pedal is adjusted to give maximum control during the highest level of spirited driving. The Magnetic Ride Control will be set to the optimum level for vehicle responsiveness. If the vehicle is equipped with Active Exhaust, the exhaust valves will open. Performance Traction Management (PTM) can be accessed through this mode by pressing OFF on the console twice.

There are attributes that vary by mode shown below. Not all vehicles have all features, depending on the vehicle options.

Modes:	SNOW/ICE	TOUR *Default*	SPORT	TRACK
Throttle Progression	Weather	Normal	Normal	Track
Transmission Shift Mode (Automatic Only)	Normal	Normal	Sport	Track
Engine Sound Management (if equipped)	Stealth	Tour	Sport	Track
Steering	Tour	Tour	Sport	Track
StabiliTrak/Electronic Stability Control (ESC) - Competitive Driving Mode/PTM (if equipped)	N/A	N/A	Competitive Driving Mode Available	PTM Available
Magnetic Ride Control (if equipped)	Tour	Tour	Sport	Track
Launch Control (when in Competitive Driving Mode)	N/A	N/A	Available	Available

Throttle Progression

Adjusts throttle sensitivity by selecting how quickly or slowly the throttle reacts to input.

Automatic Transmission Shift Mode (if equipped)

Adjusts from normal operation to Sport or Track shifting features.

Engine Sound Management (if equipped)

Changes when variable exhaust valves open or close.

Engine Sound Enhancement (turbo 4)

Allows the ability to turn Engine Sound Enhancement off.

Steering

Adjusts from a lighter steering feel in Tour Mode to reduced assist for more steering feel.

StabiliTrak/ESC - Competitive Driving Mode (if equipped)

Available in Sport and Track Modes.

Magnetic Ride Control (if equipped)

Adjusts the shock damping firmness based on driving conditions to improve comfort and performance.

Launch Control (when in Competitive Driving Mode)

Available only in Sport and Track Modes for maximum “off-the-line” acceleration when in Competitive Driving Mode.

For more information, see *Track Events and Competitive Driving* ⇨ *157*.

Competitive Driving Mode (SS, ZL1 and 1LE Models Only)

Competitive Driving Mode and Launch Control are systems designed to allow increased performance while accelerating and/or cornering. This is accomplished by regulating and optimizing the engine, brakes, and suspension performance. These modes are for use at a closed course race track and are not intended for use on public roads. They will not compensate for a driver’s inexperience or lack of familiarity with the race track. Drivers who prefer to allow the system to have more control of the engine, brakes, and suspension are advised to turn the normal TCS and StabiliTrak/Electronic Stability Control (ESC) systems on.

Caution
Attempting to shift when the drive wheels are spinning and do not have traction may cause damage to the transmission. Damage caused by misuse of the vehicle is not covered by the vehicle warranty. Do not attempt to shift when the drive wheels do not have traction.

Competitive Driving Mode allows full engine power while the StabiliTrak/ESC system helps maintain directional control of the vehicle by selective brake application. In this mode, TCS is off and Launch Control is available. Adjust your driving style to account for the available engine power. See “Launch Control” later in this section.

These lights are on when the vehicle is in the Competitive Driving Mode.

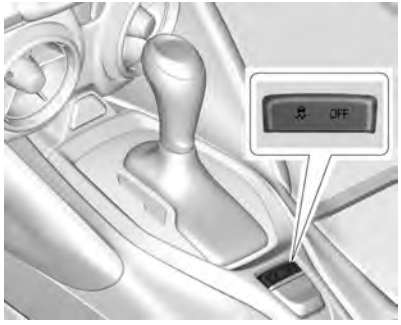

This optional handling mode can be selected by pressing the TCS/StabiliTrak/ESC button on the console two times. The appropriate message displays in the Driver Information Center (DIC).

When the TCS/StabiliTrak/ESC button is pressed again, the TCS and StabiliTrak/ESC systems are on. The appropriate message displays briefly in the DIC.

Launch Control

If the vehicle has the LT1 10 speed transmission, see *Track Events and Competitive Driving* ⇨ *157* for custom launch control information.

A Launch Control feature is available, within Competitive Driving Mode, to allow the driver to achieve high levels of vehicle acceleration in a straight line. Launch Control is a form of traction control that manages tire spin while launching the vehicle. This feature is intended for use during closed course race events where consistent zero to sixty and quarter mile times are desirable.

Launch Control is only available when the following criteria are met:

- Competitive Driving Mode is selected.
- The vehicle is not moving.
- The steering wheel is pointing straight.

Manual Transmissions

- The clutch is pressed to floor and the vehicle is in 1 (First) gear.
- The accelerator pedal is rapidly applied to wide open throttle.

The Launch Control feature will initially limit engine speed as the driver rapidly applies the accelerator pedal to wide open throttle. Allow the engine rpm to stabilize.
A smooth, quick release of the clutch, while maintaining the fully pressed accelerator pedal, will manage wheel slip. Complete shifts are described in *Manual Transmission* ⇨ *188*.

Automatic Transmissions

- The brake pedal must be firmly pressed to the floor, equivalent to a panic brake event.
- The accelerator pedal is rapidly applied to wide open throttle. (If the vehicle rolls due to wide open throttle, release the throttle, press the brake pedal more firmly, and re-apply the accelerator to wide open throttle.)

After the vehicle is launched, the system continues in Competitive Driving Mode.

Competitive Driving Mode and Launch Control are systems designed for a closed course race track and not intended for use on public roads. The systems are not intended to compensate for lack of driver experience or familiarity with the race track.

Limited-Slip Rear Axle

Vehicles with a limited-slip rear axle can give more traction on snow, mud, ice, sand, or gravel. When traction is low, this feature allows the drive wheel with the most traction to move the vehicle. The limited-slip rear axle also gives the driver enhanced control when cornering hard or completing a maneuver, such as a lane change. For vehicles with limited-slip differential, driven under severe conditions, the rear axle fluid should be changed. See *Competitive Driving Mode (SS, ZL1 and 1LE Models Only)* ⇨ *200* and *Maintenance Schedule* ⇨ *306*.

Cruise Control

When using cruise control, the vehicle can maintain a speed of about 40 km/h (25 mph) or more without keeping your foot on the accelerator. Cruise control does not work at speeds below 40 km/h (25 mph).

⚠ Warning

Cruise control can be dangerous where you cannot drive safely at a steady speed. Do not use cruise control on winding roads or in heavy traffic.

Cruise control can be dangerous on slippery roads. On such roads, fast changes in tire traction can cause excessive wheel slip, and you could lose control. Do not use cruise control on slippery roads.

If equipped with a manual transmission, the cruise control will remain active when the gears are shifted. The cruise is disengaged if the clutch is pressed for several seconds.

If the StabiliTrak/Electronic Stability Control (ESC) system begins to limit wheel spin while using cruise control, the cruise control automatically disengages. See *Traction Control/Electronic Stability Control* ⇨ *194*. When road conditions allow you to safely use it again, cruise control can be turned back on.

Cruise control will disengage if either TCS or StabiliTrak/ESC is turned off.

Cruise control is not available when using Competitive Driving Mode, if equipped. See *Competitive Driving Mode (SS, ZL1 and 1LE Models Only)* ⇨ *200*.

If the brakes are applied, cruise control disengages.

Cruise Control with Cancel Button

Cruise Control without Cancel Button

: Press to turn the system on and off. A white indicator appears in the instrument cluster when cruise is turned on.

: If equipped, press to disengage cruise control without erasing the set speed from memory.

RES+ : If there is a set speed in memory, press briefly to resume to that speed or hold upward to accelerate. If cruise control is already active, use to increase vehicle speed.

SET− : Press briefly to set the speed and activate cruise control. If cruise control is already active, use to decrease speed.

Setting Cruise Control

If is on when not in use, SET− or RES+ could get bumped and go into cruise when not desired. Keep off when cruise control is not being used.

1. Press to turn cruise control on.
2. Get up to the speed desired.
3. Press and release SET−.
4. Remove your foot from the accelerator.

The cruise control indicator on the instrument cluster turns green after cruise control has been set to the desired speed. See *Instrument Cluster* ⇨ *98*.

Resuming a Set Speed

If the cruise control is set at a desired speed and then the brakes are applied or is pressed,

if equipped, the cruise control is disengaged without erasing the set speed from memory.

Once the vehicle speed reaches about 40 km/h (25 mph) or more, briefly press RES+. The vehicle returns to the previous set speed.

Increasing Speed While Using Cruise Control

If the cruise control system is already activated:

- Press and hold RES+ until the desired speed is reached, and then release it.
- To increase the vehicle speed in small increments, briefly press RES+. For each press, the vehicle goes about 1 km/h (1 mph) faster.

The speedometer reading can be displayed in either English or metric units. See “Options” under *Instrument Cluster* ⇨ *98*. The increment value used depends on the units displayed.

Reducing Speed While Using Cruise Control

If the cruise control system is already activated:

- Press and hold SET− until the desired lower speed is reached, then release it.
- To decrease the vehicle speed in small increments, briefly press SET−. For each press, the vehicle goes about 1 km/h (1 mph) slower.

The speedometer reading can be displayed in either English or metric units. See “Options” under *Instrument Cluster* ⇨ *98*. The increment value used depends on the units displayed.

Passing Another Vehicle While Using Cruise Control

Use the accelerator pedal to increase the vehicle speed. When you take your foot off the pedal, the vehicle slows down to the previously set cruise control speed. While pressing the accelerator pedal or shortly following the release to override cruise control, briefly pressing SET– will result in cruise control set to the current vehicle speed.

Using Cruise Control on Hills

How well the cruise control works on hills depends upon the vehicle speed, load, and the steepness of the hills. When going up steep hills, you might have to step on the accelerator pedal to maintain the vehicle speed. When going downhill, you might have to brake or shift to a lower gear to keep your speed down. If the brake pedal is applied, cruise control will disengage.

Ending Cruise Control

There are five ways to end cruise control:

- Step lightly on the brake pedal (manual and automatic transmissions).
- Press the clutch pedal for several seconds or shift to Neutral (manual transmissions).

- Shift to N (Neutral) (automatic transmissions).
- Press , if equipped.
- To turn off cruise control, press .

Erasing Speed Memory

The cruise control set speed is erased from memory if is pressed or if the vehicle is turned off.

Driver Assistance Systems

This vehicle may have features that work together to help avoid crashes or reduce crash damage while driving, backing, and parking. Read this entire section before using these systems.

⚠ Warning

Do not rely on the Driver Assistance Systems. These systems do not replace the need for paying attention and driving safely. You may not hear or see alerts or warnings provided by these systems. Failure to use proper care when driving may result in injury, death, or vehicle damage. See *Defensive Driving* ⇨ *154*.

Under many conditions, these systems will not:

(Continued)

Warning (Continued)

- Detect children, pedestrians, bicyclists, or animals.
- Detect vehicles or objects outside the area monitored by the system.
- Work at all driving speeds.
- Warn you or provide you with enough time to avoid a crash.
- Work under poor visibility or bad weather conditions.
- Work if the detection sensor is not cleaned or is covered by ice, snow, mud, or dirt.
- Work if the detection sensor is covered up, such as with a sticker, magnet, or metal plate.
- Work if the area surrounding the detection sensor is damaged or not properly repaired.

(Continued)

Warning (Continued)

Complete attention is always required while driving, and you should be ready to take action and apply the brakes and/or steer the vehicle to avoid crashes.

Audible Alert

Some driver assistance features alert the driver of obstacles by beeping. To change the volume of the warning chime, see “Comfort and Convenience” under *Vehicle Personalization* ⇨ *125*.

Cleaning

Depending on vehicle options, keep these areas of the vehicle clean to ensure the best driver assistance feature performance. Driver Information Center (DIC) messages may display when the systems are unavailable or blocked.

- Front and rear bumpers and the area below the bumpers
- Front grille and headlamps
- Front camera lens in the front grille or near the front emblem
- Front side and rear side panels
- Outside of the windshield in front of the rearview mirror
- Side camera lens on the bottom of the outside mirrors
- Rear side corner bumpers
- Rear Vision Camera above the license plate

Radio Frequency

This vehicle may be equipped with driver assistance systems that operate using radio frequency. See *Radio Frequency Statement* ⇨ *334*.

Assistance Systems for Parking or Backing

If equipped, the Rear Vision Camera (RVC), Rear Park Assist (RPA), and Rear Cross Traffic Alert (RCTA) may help the driver park or avoid objects. Always check around the vehicle when parking or backing.

Rear Vision Camera (RVC)

When the vehicle is shifted into R (Reverse), the RVC displays an image of the area behind the vehicle in the infotainment display. The previous screen displays when the vehicle is shifted out of R (Reverse) after a short delay. To return to the previous screen sooner, press any button on the infotainment system, shift into P (Park), or reach a vehicle speed of approximately 12 km/h (8 mph).

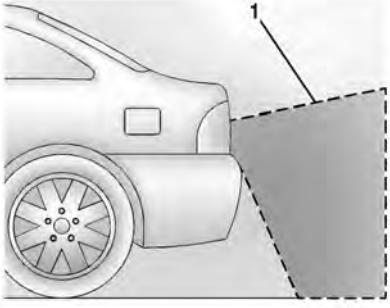

1. View Displayed by the Camera

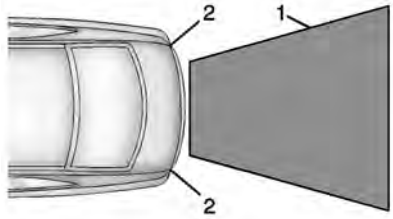

1. View Displayed by the Camera
2. Corners of the Rear Bumper

Displayed images may be farther or closer than they appear. The area displayed is limited and objects that are close to either corner of the bumper or under the bumper do not display.

A warning triangle may display to show that Rear Park Assist (RPA) has detected an object. This triangle changes from amber to red and increases in size the closer the object.

⚠ Warning

The camera(s) do not display children, pedestrians, bicyclists, crossing traffic, animals, or any other object outside of the cameras' field of view, below the bumper, or under the vehicle. Shown distances may be different from actual distances. Do not drive or park the vehicle using only these camera(s). Always check behind and around the vehicle before driving. Failure to use proper care may result in injury, death, or vehicle damage.

Park Assist

With RPA, as the vehicle backs up at speeds of less than 8 km/h (5 mph), the sensors on the rear bumper may detect objects up to 2.5 m (8 ft) behind the vehicle within a zone 25 cm (10 in) high off the ground and below bumper level. These detection distances may be shorter during warmer or humid weather.

Blocked sensors will not detect objects and can also cause false detections. Keep the sensors clean of mud, dirt, snow, ice, and slush; and clean sensors after a car wash in freezing temperatures.

⚠ Warning

The Park Assist system does not detect children, pedestrians, bicyclists, animals, or objects located below the bumper or that are too close or too far from the vehicle. It is not available at speeds greater than 8 km/h (5 mph). To prevent injury, death, or vehicle damage, even with Park Assist, always check the area around the vehicle and check all mirrors before moving forward or backing.

The instrument cluster may have a Park Assist display with bars that show “distance to object” and object location information for RPA. As the object gets closer, more bars light up and the bars change color from yellow to amber to red.

When an object is first detected in the rear, one beep will be heard from the rear. When an object is very close (<0.6 m (2 ft) in the vehicle rear), five beeps will sound from the rear.

Rear Cross Traffic Alert (RCTA)

If equipped, RCTA displays a red warning triangle with a left or right pointing arrow to warn of traffic coming from the left or right. This system detects objects coming from up to 20 m (65 ft) from the left or right side of the vehicle. When an object is detected, three beeps sound from the left or right, depending on the direction of the detected vehicle.

See *Radio Frequency Statement* ⇨ *334*.

Turning the Features On or Off

RPA and RCTA can be turned on or off. See “Collision/Detection Systems” under *Vehicle Personalization* ⇨ *125*.

To turn the rear Park Assist symbols or guidance lines on or off, see “Rear Camera” under *Vehicle Personalization* ⇨ *125*.

Forward Collision Alert (FCA) System

If equipped, the FCA system may help to avoid or reduce the harm caused by front-end crashes. When approaching a vehicle ahead too quickly, FCA provides a red flashing alert on the windshield and rapidly

beeps. FCA also lights an amber visual alert if following another vehicle too closely.

FCA detects vehicles within a distance of approximately 60 m (197 ft) and operates at speeds above 8 km/h (5 mph).

⚠ Warning

FCA is a warning system and does not apply the brakes. When approaching a slower-moving or stopped vehicle ahead too rapidly, or when following a vehicle too closely, FCA may not provide a warning with enough time to help avoid a crash. It also may not provide any warning at all. FCA does not warn of pedestrians, animals, signs, guardrails, bridges, construction barrels, or other objects. Be ready to take action and apply the brakes. See *Defensive Driving* ⇨ *154*.

FCA can be disabled with the FCA steering wheel control.

Detecting the Vehicle Ahead

FCA warnings will not occur unless the FCA system detects a vehicle ahead. When a vehicle is detected, the vehicle ahead indicator will display green. Vehicles may not be detected on curves, highway exit ramps, or hills, due to poor visibility; or if a vehicle ahead is partially blocked by pedestrians or other objects. FCA will not detect another vehicle ahead until it is completely in the driving lane.

⚠ Warning

FCA does not provide a warning to help avoid a crash, unless it detects a vehicle. FCA may not detect a vehicle ahead if the FCA sensor is blocked by dirt, snow,

(Continued)

Warning (Continued)

or ice, or if the windshield is damaged. It may also not detect a vehicle on winding or hilly roads, or in conditions that can limit visibility such as fog, rain, or snow, or if the headlamps or windshield are not cleaned or in proper condition. Keep the windshield, headlamps, and FCA sensors clean and in good repair.

Collision Alert

With Head-Up Display

Without Head-Up Display

When your vehicle approaches another detected vehicle too rapidly, the red FCA display will flash on the windshield. Also, eight rapid high-pitched beeps will sound from the front. When this Collision Alert occurs, the brake system may prepare for driver braking to occur more rapidly, which can cause a brief, mild deceleration. Continue to apply the brake pedal as needed. Cruise control may be disengaged when the Collision Alert occurs.

Tailgating Alert

The vehicle ahead indicator will display amber when you are following the vehicle ahead too closely.

Selecting the Alert Timing

The Collision Alert control is on the steering wheel. Press to set the FCA timing to Far, Medium, Near, or Off. The first button press shows the current setting on the DIC. Additional button presses will change this setting. The chosen setting will remain until it is changed and will affect the timing of both the Collision Alert and the Tailgating Alert features. The timing of both alerts will vary based on vehicle speed. The faster the vehicle speed, the farther away the alert will occur. Consider traffic and weather conditions when selecting the alert timing. The range of selectable alert timings may not be appropriate for all drivers and driving conditions.

Unnecessary Alerts

FCA may provide unnecessary alerts for turning vehicles, vehicles in other lanes, objects that are not vehicles, or shadows. These alerts are normal operation and the vehicle does not need service.

Cleaning the System

If the FCA system does not seem to operate properly, this may correct the issue:

- Clean the outside of the windshield in front of the rearview mirror.
- Clean the entire front of the vehicle.
- Clean the headlamps.

Side Blind Zone Alert (SBZA)

If equipped, the SBZA system is a lane-changing aid that assists drivers with avoiding crashes that occur with moving vehicles in the side blind zone (or spot) areas. When the vehicle is in a forward

gear, the left or right side mirror display will light up if a moving vehicle is detected in that blind zone. If the turn signal is activated and a vehicle is also detected on the same side, the display will flash as an extra warning not to change lanes. Since this system is part of the Lane Change Alert (LCA) system, read the entire LCA section before using this feature.

Lane Change Alert (LCA)

If equipped, the LCA system is a lane-changing aid that assists drivers with avoiding lane change crashes that occur with moving vehicles in the side blind zone (or spot) areas or with vehicles rapidly approaching these areas from behind. The LCA warning display will light up in the corresponding outside side mirror and will flash if the turn signal is on.

⚠ Warning

LCA does not alert the driver to vehicles outside of the system detection zones, pedestrians, bicyclists, or animals. It may not provide alerts when changing lanes under all driving conditions. Failure to use proper care when changing lanes may result in injury, death, or vehicle damage. Before making a lane change, always check mirrors, glance over your shoulder, and use the turn signals.

LCA Detection Zones

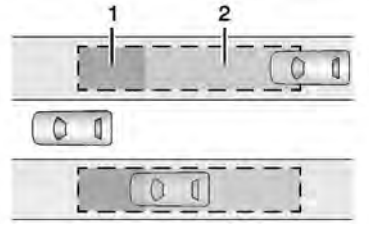

1. SBZA Detection Zone
2. LCA Detection Zone

The LCA sensor covers a zone of approximately one lane over from both sides of the vehicle, or 3.5 m (11 ft). The height of the zone is approximately between 0.5 m (1.5 ft) and 2 m (6 ft) off the ground. The Side Blind Zone Alert (SBZA) warning area starts at approximately the middle of the vehicle and goes back 5 m (16 ft). Drivers are also warned of vehicles rapidly approaching from up to 25 m (82 ft) behind the vehicle.

How the System Works

The LCA symbol lights up in the side mirrors when the system detects a moving vehicle in the next lane over that is in the side blind zone or rapidly approaching that zone from behind. A lit LCA symbol indicates it may be unsafe to change lanes. Before making a lane change, check the LCA display, check mirrors, glance over your shoulder, and use the turn signals.

Left Side Mirror Display

Right Side Mirror Display

When the vehicle is started, both outside mirror LCA displays will briefly come on to indicate the system is operating. When the vehicle is in a forward gear, the left or right side mirror display will light up if a moving vehicle is detected in the next lane over in that blind zone or rapidly approaching that zone. If the turn signal is activated in the same direction as a detected vehicle, this display will flash as an extra warning not to change lanes.

LCA can be disabled through vehicle personalization. See “Collision/Detection Systems” under *Vehicle Personalization* ⇨ *125*. If LCA is disabled by the driver, the LCA mirror displays will not light up.

When the System Does Not Seem to Work Properly

The LCA system requires some driving for the system to calibrate to maximum performance. This calibration may occur more quickly if the vehicle is driving on a straight highway road with traffic and roadside objects (e.g., guardrails, barriers). During a trip, the LCA system is not operational until the vehicle first reaches a speed of 24 km/h (15 mph).

LCA displays may not come on when passing a vehicle quickly or for a stopped vehicle. LCA may alert to objects attached to the vehicle, such as a bicycle or object extending out to either side of the vehicle. Attached objects may also interfere with the detection of vehicles. This is normal system operation; the vehicle does not need service.

LCA may not always alert the driver to vehicles in the next lane over, especially in wet conditions or when driving on sharp curves. The system does not need to be serviced. The system may light up due to guardrails, signs, trees, shrubs, and other non-moving objects. This is normal system operation; the vehicle does not need service.

LCA may not operate when the LCA sensors in the left or right corners of the rear bumper are covered with mud, dirt, snow, ice, or slush, or in heavy rainstorms. For cleaning instructions, see "Washing the Vehicle" under *Exterior Care* ⇨ *294*. If the DIC still displays the system unavailable message after cleaning both sides of the vehicle toward the rear corners of the vehicle, see your dealer.

If the LCA displays do not light up when moving vehicles are in the side blind zone or rapidly approaching this zone and the system is clean, the system may need service. Take the vehicle to your dealer.

Radio Frequency Information

See *Radio Frequency Statement* ⇨ *334*.

Fuel

Top Tier Fuel

GM recommends the use of TOP TIER Detergent Gasoline to keep the engine clean, reduce engine deposits, and maintain optimal vehicle performance. Look for the TOP TIER Logo or see www.toptiergas.com for a list of TOP TIER Detergent Gasoline marketers and applicable countries.

Recommended Fuel (3.6L V6 Engine)

Use regular unleaded gasoline meeting ASTM specification D4814 with a posted octane rating of 87 — (R+M)/2 — or higher. Do not use gasoline with a posted octane rating of less than 87, as this may cause engine knock and will lower fuel economy.

Do not use any fuel labeled E85 or FlexFuel. Do not use gasoline with ethanol levels greater than 15% by volume.

Recommended Fuel (2.0L L4 Turbo Engine and 6.2L V8 Engine)

Premium unleaded gasoline meeting ASTM specification D4814 with a posted octane rating of 93 — (R+M)/2 — is highly recommended for best performance and fuel economy. Unleaded gasoline with an octane rated as low as 87 can be used. Using unleaded gasoline rated below 93 octane, however, will lead to reduced acceleration and fuel economy. If knocking occurs, use a gasoline rated at 93 octane as soon as possible, otherwise, the engine could be damaged. If heavy knocking is heard when using gasoline with a 93 octane rating, the engine needs service.

Do not use any fuel labeled E85 or FlexFuel. Do not use gasoline with ethanol levels greater than 15% by volume.

Recommended Fuel (6.2L V8 Supercharged Engine)

Use premium unleaded gasoline meeting ASTM specification D4814 with a posted octane rating of 93 — (R+M)/2. If unavailable, unleaded gasoline with a posted octane rating of 91 may be used, but with reduced performance and fuel economy.
If the octane is less than 91, the engine could be damaged and the repairs would not be covered by the vehicle warranty. If heavy knocking is heard when using gasoline rated at 93 octane, the engine needs service.

Do not use any fuel labeled E85 or FlexFuel. Do not use gasoline with ethanol levels greater than 15% by volume.

Prohibited Fuels

Caution

Do not use fuels with any of the following conditions; doing so may damage the vehicle and void its warranty:

- For vehicles that are not FlexFuel, fuel labeled greater than 15% ethanol by volume, such as mid-level ethanol blends (16–50% ethanol), E85, or FlexFuel.
- Fuel with any amount of methanol, methylal, ferrocene, and aniline. These fuels can corrode metal fuel system parts or damage plastic and rubber parts.

(Continued)

Caution (Continued)

- Fuel containing metals such as methylcyclopentadienyl manganese tricarbonyl (MMT), which can damage the emissions control system and spark plugs.
- Fuel with a posted octane rating of less than the recommended fuel. Using this fuel will lower fuel economy and performance, and may decrease the life of the emissions catalyst.

Fuels in Foreign Countries

The U.S., Canada, and Mexico post fuel octane ratings in anti-knock index (AKI). For fuel not to use in a foreign country, see *Prohibited Fuels* ⇨ *214*.

Fuel Additives

TOP TIER Detergent Gasoline is highly recommended for use with your vehicle. If your country does not have TOP TIER Detergent Gasoline, add ACDelco Fuel System Treatment Plus−Gasoline to the vehicle's gasoline fuel tank at every oil change or 15 000 km (9,000 mi), whichever occurs first. TOP TIER Detergent Gasoline and ACDelco Fuel System Treatment Plus−Gasoline will help keep your vehicle's engine fuel deposit free and performing optimally.

Filling the Tank

An arrow on the fuel gauge indicates which side of the vehicle the fuel door is on. See *Fuel Gauge* ⇨ *103*.

⚠ Warning

Fuel vapors and fuel fires burn violently and can cause injury or death.

(Continued)

Warning (Continued)

Follow these guidelines to help avoid injuries to you and others:

- Read and follow all the instructions on the fuel pump island.
- Turn off the engine when refueling.
- Keep sparks, flames, and smoking materials away from fuel.
- Do not leave the fuel pump unattended.
- Avoid using electronic devices while refueling.
- Do not re-enter the vehicle while pumping fuel.
- Keep children away from the fuel pump and never let children pump fuel.

(Continued)

Warning (Continued)

- Before touching the fill nozzle, touch a metallic object to discharge static electricity from your body.
- Fuel can spray out if the fill nozzle is inserted too quickly. This spray can happen if the tank is nearly full, and is more likely in hot weather. Insert the fill nozzle slowly and wait for any hiss noise to stop before beginning to flow fuel.

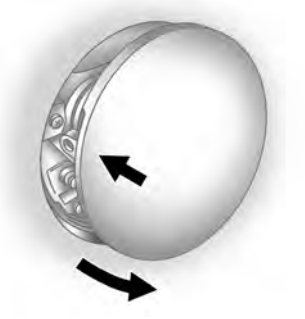

To open the fuel door, push and release the rearward center edge of the door.

The capless refueling system does not have a fuel cap. Fully insert and latch the fill nozzle, begin fueling.

⚠ Warning

Overfilling the fuel tank by more than three clicks of a standard fill nozzle may cause:

- Vehicle performance issues, including engine stalling and damage to the fuel system.

(Continued)

Warning (Continued)

- Fuel spills.
- Under certain conditions, fuel fires.

Be careful not to spill fuel. Wait five seconds after you have finished pumping before removing the fill nozzle. Clean fuel from painted surfaces as soon as possible. See *Exterior Care* ⇨ *294*. Push the fuel door closed until it latches.

⚠ Warning

If a fire starts while you are refueling, do not remove the fill nozzle. Shut off the flow of fuel by shutting off the pump or by notifying the station attendant. Leave the area immediately.

Filling the Tank with a Portable Fuel Container

If the vehicle runs out of fuel and must be filled from a portable fuel container:

1. Locate the capless funnel adapter from under the carpet in the trunk.
2. Insert and latch the funnel into the capless fuel system.

⚠ Warning

Attempting to refuel from a portable fuel container without using the funnel adapter may cause fuel spillage and damage the capless fuel system. This could cause a fire. You or others could be badly burned and the vehicle could be damaged.

3. Remove and clean the funnel adapter and return it to the storage location.

Filling a Portable Fuel Container

⚠ Warning

Never fill a portable fuel container while it is in the vehicle. Static electricity discharge from the container can ignite the fuel vapor. You or others could be badly burned and the vehicle could be damaged. To help avoid injury to you and others:

- Dispense fuel only into approved containers.
- Do not fill a container while it is inside a vehicle, in a vehicle's trunk, in a pickup bed, or on any surface other than the ground.

(Continued)

Warning (Continued)

- Bring the fill nozzle in contact with the inside of the fill opening before operating the nozzle. Maintain contact until filling is complete.
- Keep sparks, flames, and smoking materials away from fuel.
- Do not use electronic devices while pumping fuel.

Trailer Towing

General Towing Information

⚠ Warning

Never tow a trailer with your vehicle. It was not designed or intended to tow a trailer.

Conversions and Add-Ons

Add-On Electrical Equipment

⚠ Warning

The Data Link Connector (DLC) is used for vehicle service and Emission Inspection/Maintenance testing. See *Malfunction Indicator Lamp* ⇨ *110*. A device connected to the DLC — such as an aftermarket fleet or driver-behavior tracking device — may interfere with vehicle systems. This could affect vehicle operation and cause a crash. Such devices may also access information stored in the vehicle's systems.

Caution

Some electrical equipment can damage the vehicle or cause components to not work and would not be covered by the vehicle warranty. Always check with your dealer before adding electrical equipment.

Add-on equipment can drain the vehicle's 12-volt battery, even if the vehicle is not operating.

The vehicle has an airbag system. Before attempting to add anything electrical to the vehicle, see *Servicing the Airbag-Equipped Vehicle* ⇨ *68* and *Adding Equipment to the Airbag-Equipped Vehicle* ⇨ *68*.

Vehicle Care

General Information

General Information 220
California Proposition 65 Warning 220
California Perchlorate Materials Requirements 221
Accessories and Modifications 221

Vehicle Checks

Doing Your Own Service Work 221
Hood 222
Engine Compartment Overview 224
Engine Oil 229
Engine Oil Life System 232
Automatic Transmission Fluid 233
Manual Transmission Fluid . . . 234
Hydraulic Clutch 234
Engine Air Filter Life System (2.0L LTG and 3.6L LGX Engines Only) 234
Engine Air Cleaner/Filter 235
Cooling System 237
Engine Overheating 241
Washer Fluid 243
Brakes 243
Brake Fluid 244
Battery - North America 246
Rear Axle 246
Starter Switch Check 247
Automatic Transmission Shift Lock Control Function Check 247
Park Brake and P (Park) Mechanism Check 247
Wiper Blade Replacement 248
Windshield Replacement 249
Gas Strut(s) 249

Headlamp Aiming

Front Headlamp Aiming 250

Bulb Replacement

Bulb Replacement 251
Halogen Bulbs 251
High Intensity Discharge (HID) Lighting 251
LED Lighting 251
Back-Up Lamps 251
License Plate Lamp 252

Electrical System

Electrical System Overload . . . 252
Fuses and Circuit Breakers . . . 253
Engine Compartment Fuse Block 253
Rear Compartment Fuse Block 257

Wheels and Tires

Tires 259
All-Season Tires 260
Winter Tires 261
Run-Flat Tires 261
Low-Profile Tires 262
Summer Tires 262
Tire Sidewall Labeling 263
Tire Designations 264
Tire Terminology and Definitions 265
Tire Pressure 267
Tire Pressure for High-Speed Operation 268
Tire Pressure Monitor System 269
Tire Pressure Monitor Operation 270
Tire Inspection 274
Tire Rotation 274
When It Is Time for New Tires 275
Buying New Tires 276
Different Size Tires and Wheels 278

Uniform Tire Quality Grading 278
Wheel Alignment and Tire Balance 280
Wheel Replacement 280
Tire Chains 281
If a Tire Goes Flat 281
Tire Sealant and Compressor Kit 282
Storing the Tire Sealant and Compressor Kit 289

Jump Starting
Jump Starting - North America 289

Towing the Vehicle
Towing the Vehicle 292
Recreational Vehicle Towing 294

Appearance Care
Exterior Care 294
Interior Care 300
Floor Mats 303

General Information

For service and parts needs, visit your dealer. You will receive genuine GM parts and GM-trained and supported service people.

Genuine GM parts have one of these marks:

California Proposition 65 Warning

⚠ Warning

Most motor vehicles, including this one, as well as many of its service parts and fluids, contain and/or emit chemicals known to the State of California to cause cancer and birth defects or other reproductive harm. Engine exhaust, many parts and systems, many fluids, and some component wear by-products contain and/or emit these chemicals. For more information go to www.P65Warnings.ca.gov/passenger-vehicle.

See *Battery - North America* ⇨ *246* and *Jump Starting - North America* ⇨ *289* and the back cover.

California Perchlorate Materials Requirements

Certain types of automotive applications, such as airbag initiators, seat belt pretensioners, and lithium batteries contained in electronic keys, may contain perchlorate materials. Perchlorate Material – special handling may apply. See www.dtsc.ca.gov/hazardouswaste/perchlorate.

Accessories and Modifications

Adding non-dealer accessories or making modifications to the vehicle can affect vehicle performance and safety, including such things as airbags, braking, stability, ride and handling, emissions systems, aerodynamics, durability, and electronic systems like antilock brakes, traction control, and stability control. These accessories or modifications could even cause malfunction or damage not covered by the vehicle warranty.

Damage to suspension components caused by modifying vehicle height outside of factory settings will not be covered by the vehicle warranty.

Damage to vehicle components resulting from modifications or the installation or use of non-GM certified parts, including control module or software modifications, is not covered under the terms of the vehicle warranty and may affect remaining warranty coverage for affected parts.

GM Accessories are designed to complement and function with other systems on the vehicle. See your dealer to accessorize the vehicle using genuine GM Accessories installed by a dealer technician.

Also, see *Adding Equipment to the Airbag-Equipped Vehicle* ⇨ *68*.

Vehicle Checks

Doing Your Own Service Work

⚠ Warning

It can be dangerous to work on your vehicle if you do not have the proper knowledge, service manual, tools, or parts. Always follow owner's manual procedures and consult the service manual for your vehicle before doing any service work.

If doing some of your own service work, use the proper service manual. It tells you much more about how to service the vehicle than this manual can. To order the proper service manual, see *Publication Ordering Information* ⇨ *333*.

This vehicle has an airbag system. Before attempting to do your own service work, see *Servicing the Airbag-Equipped Vehicle* ⇨ *68*.

If equipped with remote vehicle start, open the hood before performing any service work to prevent remote starting the vehicle accidentally. See *Remote Vehicle Start* ⇨ *16*.

Keep a record with all parts receipts and list the mileage and the date of any service work performed. See *Maintenance Records* ⇨ *318*.

Caution

Even small amounts of contamination can cause damage to vehicle systems. Do not allow contaminants to contact the fluids, reservoir caps, or dipsticks.

Hood

⚠ Warning

Turn the vehicle off before opening the hood. If the engine is running with the hood open, you or others could be injured.

⚠ Warning

Components under the hood can get hot from running the engine. To help avoid the risk of burning unprotected skin, never touch these components until they have cooled, and always use a glove or towel to avoid direct skin contact.

Clear any snow from the hood before opening.

To open the hood:

1. Pull the hood release lever with the symbol. It is on the lower left side of the instrument panel.

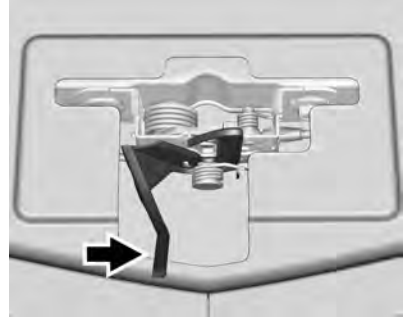

2. Go to the front of the vehicle and locate the secondary release lever under the front center of the hood. Push the secondary hood release lever to the right to release.
3. After you have partially lifted the hood, the gas strut system will automatically lift the hood and hold it in the fully open position.

To close the hood:

1. Before closing the hood, be sure all filler caps are on properly, and all tools are removed.

2. Pull the hood down until the strut system is no longer holding up the hood.
3. Allow the hood to fall. Check to make sure the hood is latched completely. Repeat this process with additional force if necessary.

⚠ Warning

Do not drive the vehicle if the hood is not latched completely. The hood could open fully, block your vision, and cause a crash. You or others could be injured. Always close the hood completely before driving.

Engine Compartment Overview

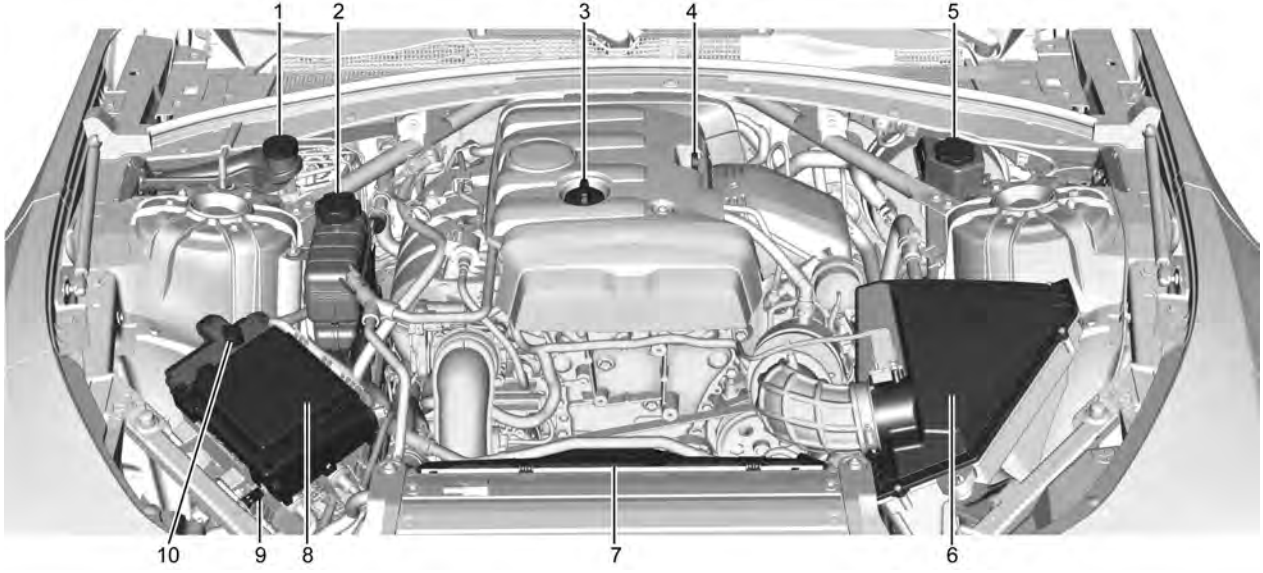

2.0L L4 Engine (LTG)

1. Windshield Washer Fluid Reservoir. See *Washer Fluid* ⇨ *243*.
2. Engine Coolant Surge Tank and Pressure Cap. See *Cooling System* ⇨ *237*.
3. Engine Oil Fill Cap. See *Engine Oil* ⇨ *229*.
4. Engine Oil Dipstick. See *Engine Oil* ⇨ *229*.
5. Brake/Clutch Fluid Reservoir. See *Brake Fluid* ⇨ *244* and *Hydraulic Clutch* ⇨ *234*.
6. *Engine Air Cleaner/Filter* ⇨ *235*.
7. Engine Cooling Fan (Out of View). See *Cooling System* ⇨ *237*.
8. *Engine Compartment Fuse Block* ⇨ *253*.
9. Negative (–) Battery Terminal. See *Jump Starting - North America* ⇨ *289*.
10. Positive (+) Battery Terminal. See *Jump Starting - North America* ⇨ *289*.

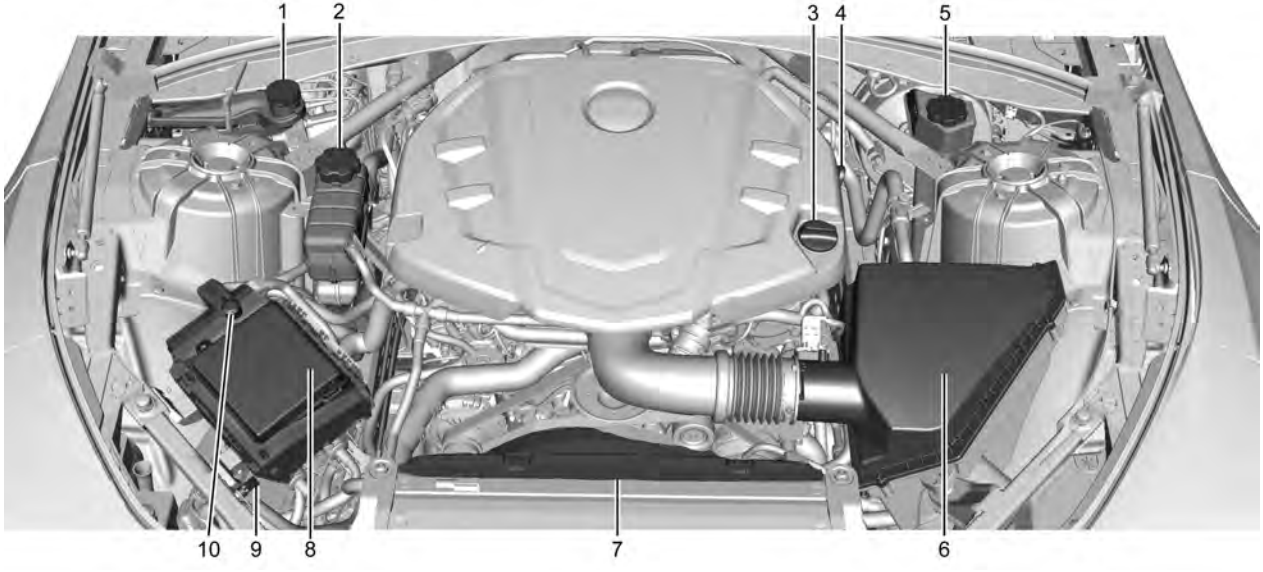

3.6L V6 Engine (LGX)

1. Windshield Washer Fluid Reservoir. See *Washer Fluid* ⇨ *243*.
2. Engine Coolant Surge Tank and Pressure Cap. See *Cooling System* ⇨ *237*.
3. Engine Oil Fill Cap. See *Engine Oil* ⇨ *229*.
4. Engine Oil Dipstick. See *Engine Oil* ⇨ *229*.
5. Brake/Clutch Fluid Reservoir. See *Brake Fluid* ⇨ *244* and *Hydraulic Clutch* ⇨ *234*.
6. *Engine Air Cleaner/Filter* ⇨ *235*.
7. Engine Cooling Fan (Out of View). See *Cooling System* ⇨ *237*.
8. *Engine Compartment Fuse Block* ⇨ *253*.
9. Negative (–) Battery Terminal. See *Jump Starting - North America* ⇨ *289*.
10. Positive (+) Battery Terminal. See *Jump Starting - North America* ⇨ *289*.

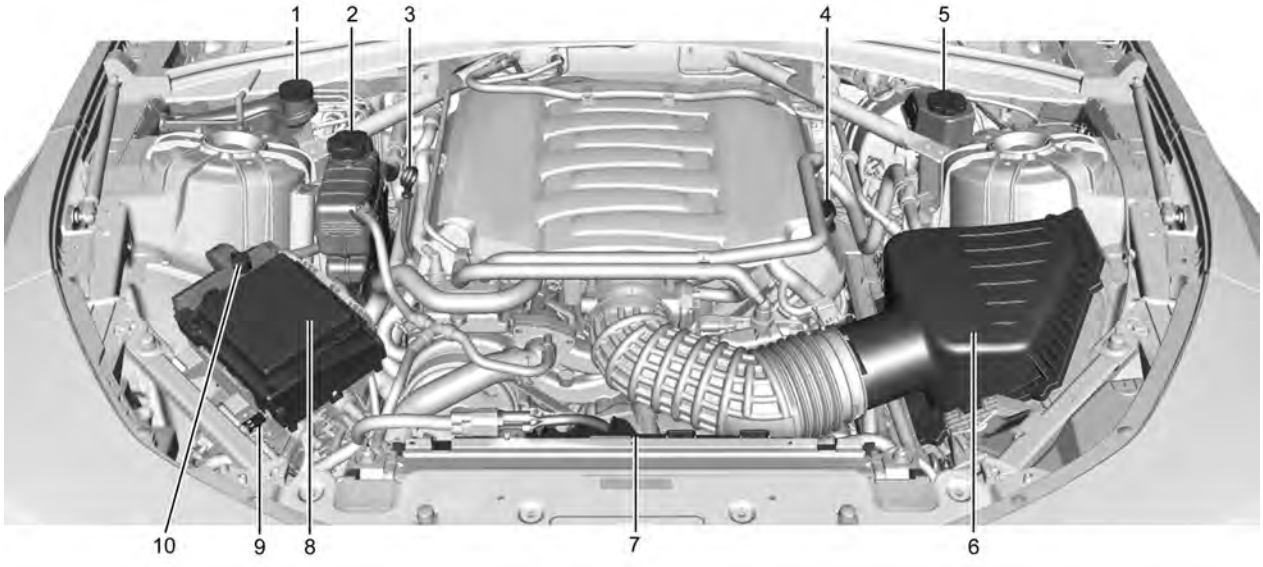

6.2L V8 Engine (LT1)

1. Windshield Washer Fluid Reservoir. See *Washer Fluid* ⇨ *243*.
2. Engine Coolant Surge Tank and Pressure Cap. See *Cooling System* ⇨ *237*.
3. Engine Oil Dipstick. See *Engine Oil* ⇨ *229*.
4. Engine Oil Fill Cap. See *Engine Oil* ⇨ *229*.
5. Brake/Clutch Fluid Reservoir. See *Brake Fluid* ⇨ *244* and *Hydraulic Clutch* ⇨ *234*.
6. *Engine Air Cleaner/Filter* ⇨ *235*.
7. Engine Cooling Fan (Out of View). See *Cooling System* ⇨ *237*.
8. *Engine Compartment Fuse Block* ⇨ *253*.
9. Negative (–) Battery Terminal. See *Jump Starting - North America* ⇨ *289*.
10. Positive (+) Battery Terminal. See *Jump Starting - North America* ⇨ *289*.

If the vehicle has a 6.2L V8 LT4 engine, see the Camaro High Performance supplement.

Engine Oil

To ensure proper engine performance and long life, careful attention must be paid to engine oil. Following these simple, but important steps will help protect your investment:

- Use engine oil approved to the proper specification and of the proper viscosity grade. See “Selecting the Right Engine Oil” in this section.
- Check the engine oil level regularly and maintain the proper oil level. See “Checking Engine Oil” and “When to Add Engine Oil” in this section.
- Change the engine oil at the appropriate time. See *Engine Oil Life System* ⇨ *232*.
- Always dispose of engine oil properly. See “What to Do with Used Oil” in this section.

Checking Engine Oil

Check the engine oil level regularly, every 650 km (400 mi), especially prior to a long trip. The engine oil dipstick handle is a loop. See *Engine Compartment Overview* ⇨ *224* for the location.

⚠ Warning

The engine oil dipstick handle may be hot; it could burn you. Use a towel or glove to touch the dipstick handle.

If a low oil Driver Information Center (DIC) message displays, check the oil level.

Follow these guidelines:

- To get an accurate reading, park the vehicle on level ground. Check the engine oil level after the engine has been off for at least two hours. Checking the engine oil level on steep grades or too soon after engine shutoff can result in incorrect readings. Accuracy improves when

checking a cold engine prior to starting. Remove the dipstick and check the level.

- If unable to wait two hours, the engine must be off for at least 15 minutes if the engine is warm, or at least 30 minutes if the engine is not warm. Pull out the dipstick, wipe it with a clean paper towel or cloth, then push it back in all the way. Remove it again, keeping the tip down, and check the level.

When to Add Engine Oil

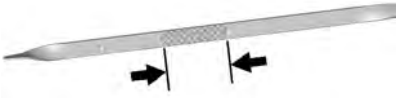

LTG 2.0L L4 Engine

LGX 3.6L V6 Engine Shown, 6.2L V8 Engine Similar

If the oil is below the cross-hatched area at the tip of the dipstick and the engine has been off for at least 15 minutes, add 1 L (1 qt) of the recommended oil and then recheck the level. See “Selecting the Right Engine Oil” later in this section for an explanation of what kind of oil to use. For engine oil crankcase capacity, see *Capacities and Specifications* ⇨ *320*.

Caution

Do not add too much oil. Oil levels above or below the acceptable operating range shown on the dipstick are harmful to the engine. If the oil level is

(Continued)

Caution (Continued)

above the operating range (i.e., the engine has so much oil that the oil level gets above the cross-hatched area that shows the proper operating range), the engine could be damaged. Drain the excess oil or limit driving of the vehicle, and seek a service professional to remove the excess oil.

See *Engine Compartment Overview* ⇨ *224* for the location of the engine oil fill cap.

Add enough oil to put the level somewhere in the proper operating range. Push the dipstick all the way back in when through.

Selecting the Right Engine Oil (2.0L (LTG) L4 and 3.6L (LGX) V6 Engines)

Selecting the right engine oil depends on both the proper oil specification and viscosity grade. See *Recommended Fluids and Lubricants* ⇨ *315*.

Specification

Use full synthetic engine oils that meet the dexos1 specification. Engine oils that have been approved by GM as meeting the dexos1 specification are marked with the dexos1 approved logo. See www.gmdexos.com.

Caution

Failure to use the recommended engine oil or equivalent can result in engine damage not covered by the vehicle warranty.

Viscosity Grade

Use SAE 5W-30 viscosity grade engine oil. Cold Temperature Operation: In an area of extreme cold, where the temperature falls below −29 °C (−20 °F), an SAE 0W-30 oil may be used. An oil of this viscosity grade will provide easier cold starting for the engine at extremely low temperatures.

When selecting an oil of the appropriate viscosity grade, it is recommended to select an oil of the correct specification. See “Specification” earlier in this section.

Selecting the Right Engine Oil (6.2L (LT1) V8 Engine)

Selecting the right engine oil depends on both the proper oil specification and viscosity grade. See *Recommended Fluids and Lubricants* ⇨ *315*.

Specification

Use engine oils that meet the dexos2 specification. Engine oils that have been approved by GM as meeting the dexos2 specification are marked with the dexos2 approved logo. See www.gmdexos.com.

Caution

Failure to use the recommended engine oil or equivalent can result in engine damage not covered by the vehicle warranty.

Viscosity Grade

Use SAE 0W-40 viscosity grade engine oil.

When selecting an oil of the appropriate viscosity grade, it is recommended to select an oil of the correct specification. See “Specification” earlier in this section.

If 0W-40 dexos2 oil is not available, SAE 5W-30 dexos1 full synthetic engine oil may be used for street use.

Engine Oil Additives/Engine Oil Flushes

Do not add anything to the oil. The recommended oils meeting the dexos specification are all that is needed for good performance and engine protection.

Engine oil system flushes are not recommended and could cause engine damage not covered by the vehicle warranty.

What to Do with Used Oil

Used engine oil contains certain elements that can be unhealthy for your skin and could even cause cancer. Do not let used oil stay on your skin for very long. Clean your skin and nails with soap and water, or a good hand cleaner. Wash or properly dispose of clothing or rags containing used engine oil. See the manufacturer's warnings about the use and disposal of oil products.

Used oil can be a threat to the environment. If you change your own oil, be sure to drain all the oil from the filter before disposal. Never dispose of oil by putting it in the trash or pouring it on the ground, into sewers, or into streams or bodies of water. Recycle it by taking it to a place that collects used oil.

Engine Oil Life System

When to Change Engine Oil

This vehicle has a computer system that indicates when to change the engine oil and filter. This is based on a combination of factors which include engine revolutions, engine temperature, and miles driven. Based on driving conditions, the mileage at which an oil change is indicated can vary considerably. For the oil life system to work properly, the system must be reset every time the oil is changed.

When the system has calculated that oil life has been diminished, it indicates that an oil change is necessary. A CHANGE ENGINE OIL SOON message comes on. Change the oil as soon as possible within the next 1 000 km (600 mi). It is possible that, if driving under the best conditions, the oil life system might indicate that an oil change is not necessary for up to a year. The engine oil and filter must be changed at least once a year and, at this time, the system must

be reset. Your dealer has trained service people who will perform this work and reset the system. It is also important to check the oil regularly over the course of an oil drain interval and keep it at the proper level.

If the system is ever reset accidentally, the oil must be changed at 5 000 km (3,000 mi) since the last oil change. Remember to reset the oil life system whenever the oil is changed.

How to Reset the Engine Oil Life System

Reset the system whenever the engine oil is changed so that the system can calculate the next engine oil change. To reset the system:

1. Display the REMAINING OIL LIFE on the DIC. See *Driver Information Center (DIC)* ⇨ *117*.
2. Press and hold SEL on the DIC while the Oil Life display is active. The oil life will change to 100%.

The oil life system can also be reset as follows:

1. Display the REMAINING OIL LIFE on the DIC. See *Driver Information Center (DIC)* ⇨ *117*.
2. Fully press and release the accelerator pedal three times within five seconds.

The system is reset when the CHANGE ENGINE OIL SOON message goes off.

If the CHANGE ENGINE OIL SOON message comes back on when the vehicle is started, the engine oil life system has not been reset. Repeat the procedure.

Automatic Transmission Fluid

How to Check Automatic Transmission Fluid

It is not necessary to check the transmission fluid level.
A transmission fluid leak is the only reason for fluid loss. If a leak occurs, take the vehicle to your dealer and have it repaired as soon as possible.

The vehicle is not equipped with a transmission fluid level dipstick. There is a special procedure for checking and changing the transmission fluid. Because this procedure is difficult, this should be done at the dealer. Contact the dealer for additional information or the procedure can be found in the service manual. To purchase a service manual, see *Publication Ordering Information* ⇨ *333*.

Caution

Use of the incorrect automatic transmission fluid may damage the vehicle, and the damage may not be covered by the vehicle warranty. Always use the correct automatic transmission fluid. See *Recommended Fluids and Lubricants* ⇨ *315*.

Change the fluid and filter at the intervals listed in *Maintenance Schedule* ⇨ *306*, and be sure to use the fluid listed in *Recommended Fluids and Lubricants* ⇨ *315*.

Manual Transmission Fluid

It is not necessary to check the manual transmission fluid level. A transmission fluid leak is the only reason for fluid loss. If a leak occurs, take the vehicle to your dealer and have it repaired as soon as possible. See *Recommended Fluids and Lubricants* ⇨ *315* for the proper fluid to use.

Hydraulic Clutch

For vehicles with a manual transmission, it is not necessary to regularly check brake/clutch fluid unless there is a leak suspected. Adding fluid will not correct a leak. A fluid loss in this system could indicate a problem. Have the system inspected and repaired.

When to Check and What to Use

The brake/hydraulic clutch fluid reservoir cap has this symbol on it. See *Engine Compartment Overview* ⇨ *224* for reservoir location. The common hydraulic clutch and brake master cylinder fluid reservoir is filled with brake fluid as indicated on the reservoir cap. See *Brake Fluid* ⇨ *244* for brake fluid to use.

How to Check and Add Fluid

Visually check the brake/clutch fluid reservoir to make sure the fluid level is at the MIN (minimum) line on the side of the reservoir. The brake/hydraulic clutch fluid system should be closed and sealed.

Do not remove the cap to check the fluid level or to top-off the fluid level. Remove the cap only when necessary to add the proper fluid until the level reaches the MIN line.

Engine Air Filter Life System (2.0L LTG and 3.6L LGX Engines Only)

When to Change Engine Air Filter

If equipped, this feature provides an indication of when to change the engine air filter. It is based on driving conditions, which can cause when to change to vary greatly. It is possible an air filter change may not be indicated for up to four years.

When the "Replace at Next Oil Change" message displays, the engine air filter should be replaced at the time of the next engine oil change. When the "Replace Engine Air Filter Now" message displays, the engine air filter should be replaced as soon as possible. Reset the engine air filter life system after

the engine air filter is replaced. See your dealer for service and to reset the system.

How to Reset Engine Air Filter Life System

Reset the system whenever the engine air filter is replaced so that the system can calculate the next engine air filter change.

To reset:

1. Place the vehicle in P (Park).
2. Select Engine Air Filter Life on the DIC menu. See *Driver Information Center (DIC)* ⇨ *117*.
3. Press ▷ to move to the Reset/Disable display area. Select Reset then press **SEL**. Then press Yes to confirm the reset.
4. 100% Air Filter Life will be displayed when the Engine Air Filter Life System is successfully reset.

Engine Air Cleaner/Filter

If the vehicle has a 6.2L V8 LT4 engine, see the Camaro High Performance supplement.

The engine air cleaner/filter is in the engine compartment on the driver side of the vehicle. See *Engine Compartment Overview* ⇨ *224* for location.

When to Inspect the Engine Air Cleaner/Filter

- For intervals on changing and inspecting the engine air filter, see *Maintenance Schedule* ⇨ *306*.
- If equipped with Engine Air Filter Life System, see *Engine Air Filter Life System (2.0L LTG and 3.6L LGX Engines Only)* ⇨ *234*.
- If driving in very dusty areas, follow the engine air filter inspecting and changing intervals, see *Maintenance Schedule* ⇨ *306*.

How to Inspect the Engine Air Cleaner/Filter

Do not start the engine or have the engine running with the engine air cleaner/filter housing open. Before removing the engine air cleaner/filter, make sure that the engine air cleaner/filter housing and nearby components are free of dirt and debris. Remove the engine air cleaner/filter. Lightly tap and shake the engine air cleaner/filter (away from the vehicle), to release loose dust and dirt. Inspect the engine air cleaner/filter for damage, and replace if damaged. Do not clean the engine air cleaner/filter or components with water or compressed air.

To inspect or replace the engine air cleaner/filter:

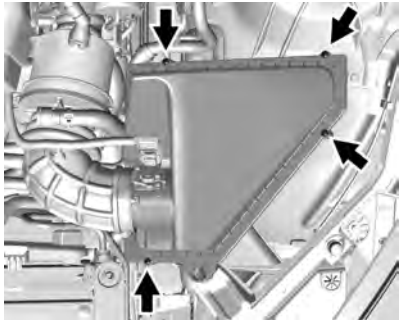

2.0L L4 Engine (LTG)

1. Remove the four screws and lift the cover assembly.
2. Inspect or replace the air cleaner/filter.
3. Reverse Steps 1 and 2 to reinstall the housing cover.

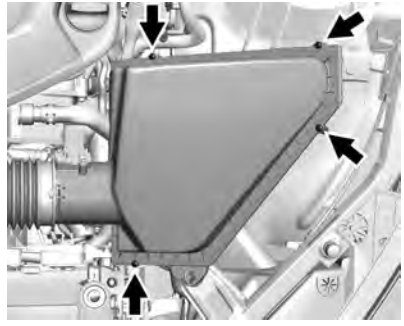

3.6L V6 Engine (LGX)

1. Remove the four screws and lift the cover assembly.
2. Inspect or replace the air cleaner/filter.
3. Reverse Steps 1 and 2 to reinstall the housing cover.

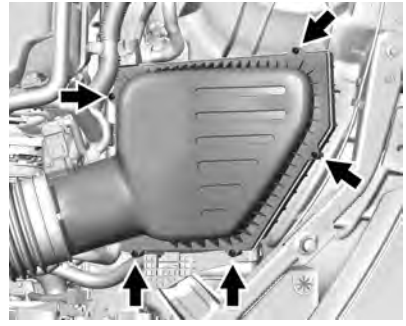

6.2L V8 Engine (LT1)

1. Remove the five screws and lift the cover assembly.
2. Inspect or replace the air cleaner/filter.
3. Reverse Steps 1 and 2 to reinstall the housing cover.

⚠ Warning

Operating the engine with the air cleaner/filter off can cause you or others to be burned. Use caution when working on the engine. Do

(Continued)

Warning (Continued)

not start the engine or drive the vehicle with the air cleaner/filter off, as flames may be present if the engine backfires.

Caution

If the air cleaner/filter is off, dirt can easily get into the engine, which could damage it. Always have the air cleaner/filter in place when driving.

Cooling System

If the vehicle has a 6.2L V8 LT4 engine, see the Camaro High Performance supplement.

The cooling system allows the engine to maintain the correct working temperature.

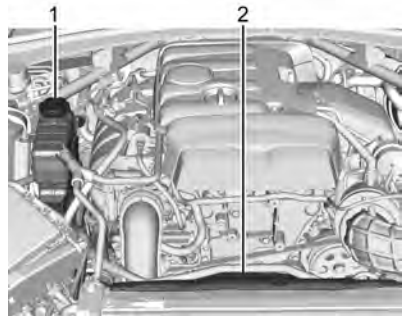

2.0L L4 Engine (LTG)

1. Engine Coolant Surge Tank and Pressure Cap
2. Engine Cooling Fan (Out of View)

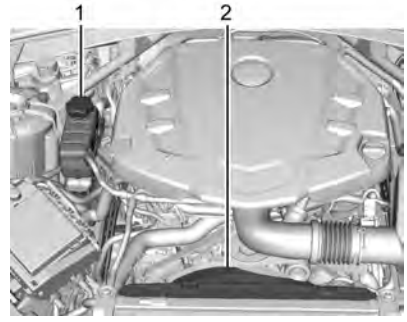

3.6L V6 Engine (LGX)

1. Engine Coolant Surge Tank and Pressure Cap
2. Engine Cooling Fan (Out of View)

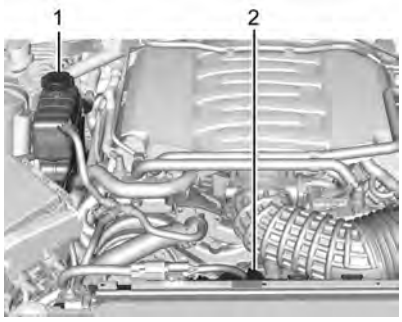

6.2L V8 Engine (LT1)

1. Engine Coolant Surge Tank and Pressure Cap
2. Engine Cooling Fan (Out of View)

⚠ Warning

An underhood electric fan can start up even when the engine is not running and can cause injury. Keep hands, clothing, and tools away from any underhood electric fan.

⚠ Warning

Do not touch heater or radiator hoses, or other engine parts. They can be very hot and can burn you. Do not run the engine if there is a leak; all coolant could leak out. That could cause an engine fire and can burn you. Fix any leak before driving the vehicle.

Engine Coolant

The cooling system in the vehicle is filled with DEX-COOL engine coolant. See *Maintenance Schedule* ⇨ *306* and *Recommended Fluids and Lubricants* ⇨ *315*.

The following explains the cooling system and how to check and add coolant when it is low. If there is a problem with engine overheating, see *Engine Overheating* ⇨ *241*.

What to Use

⚠ Warning

Plain water, or other liquids such as alcohol, can boil before the proper coolant mixture will. With plain water or the wrong mixture, the engine could get too hot but there would not be an overheat warning. The engine could catch fire and you or others could be burned.

Use a 50/50 mixture of clean drinkable water and DEX-COOL coolant. This mixture:

- Gives freezing protection down to −37 °C (−34 °F), outside temperature
- Gives boiling protection up to 129 °C (265 °F), engine temperature
- Protects against rust and corrosion
- Will not damage aluminum parts

- Helps keep the proper engine temperature

Caution

Do not use anything other than a mix of DEX-COOL coolant that meets GM Standard GMW3420 and clean, drinkable water. Anything else can cause damage to the engine cooling system and the vehicle, which would not be covered by the vehicle warranty.

Never dispose of engine coolant by putting it in the trash, pouring it on the ground, or into sewers, streams, or bodies of water. Have the coolant changed by an authorized service center, familiar with legal requirements regarding used coolant disposal. This will help protect the environment and your health.

Checking Coolant

The vehicle must be on a level surface when checking the coolant level.

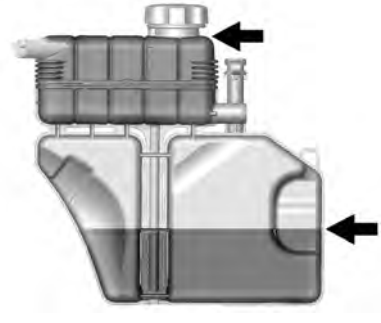

It is normal to see coolant moving in the upper coolant hose return line when the engine is running. It is also normal to see bubbles entering the surge tank through the small hose.

Check to see if coolant is visible in the coolant surge tank. If the coolant inside the coolant surge tank is boiling, do not do anything else until it cools down.

If coolant is visible but the coolant level is not at or above the cold fill line, add a 50/50 mixture of clean drinkable water and DEX-COOL coolant.

Be sure the cooling system is cool before this is done.

It is normal for the coolant level in the bottom chamber to rise and fall with operating temperature and ambient conditions. Coolant will evaporate from the bottom chamber in normal operation. This will happen faster when the vehicle is driven for long periods in hot, dry conditions.

If no coolant is visible in the coolant surge tank, add coolant as follows:

How to Add Coolant to the Coolant Surge Tank

If no problem is found, check to see if coolant is visible in the coolant surge tank. If coolant is visible but the coolant level is not at the bottom of the fill neck, add a 50/50 mixture of clean, drinkable water and DEX-COOL coolant at the coolant surge tank, but be sure the cooling

system, including the coolant surge tank pressure cap, is cool before you do it.

⚠ Warning

Steam and scalding liquids from a hot cooling system are under pressure. Turning the pressure cap, even a little, can cause them to come out at high speed and you could be burned. Never turn the cap when the cooling system, including the pressure cap, is hot. Wait for the cooling system and pressure cap to cool.

⚠ Warning

Plain water, or other liquids such as alcohol, can boil before the proper coolant mixture will. With plain water or the wrong mixture, the engine could get too hot but there would not be an overheat

(Continued)

Warning (Continued)

warning. The engine could catch fire and you or others could be burned.

⚠ Warning

Spilling coolant on hot engine parts can burn you. Coolant contains ethylene glycol and it will burn if the engine parts are hot enough.

Caution

Failure to follow the specific coolant fill procedure could cause the engine to overheat and could cause system damage. If coolant is not visible in the surge tank, contact your dealer.

1. Remove the coolant surge tank pressure cap from the top chamber when the cooling system, including the coolant surge tank pressure cap and upper radiator hose, is no longer hot.

   Turn the pressure cap slowly counterclockwise. If you hear a hiss, wait for that to stop. This will allow any pressure still left to be vented out the discharge hose.

2. Keep turning the pressure cap slowly and remove it. Open the surge tank service port cap to the lower chamber.

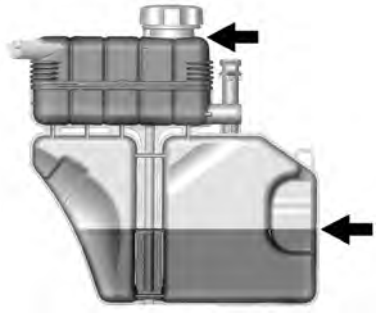

3. Fill the surge tank top chamber with the proper mixture to the bottom of the fill neck. The top chamber needs to be completely full. Fill the surge tank bottom chamber through the service port to approximately half.
4. With the coolant surge tank pressure cap off and the surge tank service port cap open, start the engine and let it run until you can feel the upper radiator hose getting hot. Watch out for the engine cooling fan. By this time, the coolant level inside the coolant surge tank top chamber may be lower. If the level is lower, add more of the proper mixture to the surge tank top chamber until the level reaches the bottom of the fill neck.
5. Replace the surge tank pressure cap tightly and close the surge tank service port cap.

Caution
If the pressure cap is not tightly installed, coolant loss and engine damage may occur. Be sure the cap is properly and tightly secured.

Check the level in the surge tank top and bottom chambers when the cooling system has cooled down. If the coolant is not at the proper levels, repeat Steps 1–3 and reinstall the pressure cap and close the service port. If the coolant still is not at the proper levels when the system cools down again, see your dealer.

Engine Overheating

The vehicle has several indicators to warn of the engine overheating.

There is an engine coolant temperature gauge on the instrument cluster. See *Engine Coolant Temperature Gauge* ⇨ *106*. The vehicle may also display a message on the Driver Information Center (DIC).

If the decision is made not to lift the hood when this warning appears, get service help right away. See *Roadside Assistance Program* ⇨ *328*.

If the decision is made to lift the hood, make sure the vehicle is parked on a level surface.

Then check to see if the engine cooling fan is running. If the engine is overheating, the fan should be running. If it is not, do not continue to run the engine. Have the vehicle serviced.

Caution

Do not run the engine if there is a leak in the engine cooling system. This can cause a loss of all coolant and can damage the system and vehicle. Have any leaks fixed right away.

If Steam Is Coming from the Engine Compartment

⚠ Warning

Steam and scalding liquids from a hot cooling system are under pressure. Turning the pressure cap, even a little, can cause them to come out at high speed and you could be burned. Never turn the cap when the cooling system, including the pressure cap, is hot. Wait for the cooling system and pressure cap to cool.

If Steam Is Coming from the Engine Compartment with no Overheat Warning

The hood extractor, if equipped, is functional. It will allow water from rain and car washes to enter the engine compartment and contact hot surfaces. If steam is coming from the hood extractor with no accompanying overheat warning, no service is needed.

If No Steam Is Coming from the Engine Compartment

If an engine overheat warning is displayed but no steam can be seen or heard, the problem may not be too serious. Sometimes the engine can get a little too hot when the vehicle:

- Climbs a long hill on a hot day
- Stops after high-speed driving
- Idles for long periods in traffic

If the overheat warning is displayed with no sign of steam:

1. Turn the air conditioning off.
2. Turn the heater on to the highest temperature and to the highest fan speed. Open the windows as necessary.
3. When it is safe to do so, pull off the road, shift to P (Park) or N (Neutral) for an automatic transmission or Neutral for a manual transmission, and let the engine idle.

If the engine coolant temperature gauge is no longer in the overheated area, the vehicle can be driven. Continue to drive the vehicle slowly for about 10 minutes. Keep a safe vehicle distance from the vehicle in front. If the warning does not come back on, continue to drive normally and have the cooling system checked for proper fill and function.

If the warning continues, pull over, stop, and park the vehicle right away.

If there is no sign of steam, idle the engine for three minutes while parked. If the warning is still displayed, turn off the engine until it cools down.

Washer Fluid

What to Use

When windshield washer fluid is needed, be sure to read the manufacturer's instructions before use. If operating the vehicle in an area where the temperature can fall below freezing, use a fluid that has sufficient protection against freezing.

Adding Washer Fluid

Open the cap with the washer symbol on it. Add washer fluid until the reservoir is full. See *Engine Compartment Overview* ⇨ *224* for reservoir location.

Caution

- Do not use washer fluid that contains any type of water repellent coating. This can cause the wiper blades to chatter or skip.
- Do not use engine coolant (antifreeze) in the windshield washer. It can damage the windshield washer system and paint.
- Do not mix water with ready-to-use washer fluid. Water can cause the solution to freeze and damage the washer fluid tank and other parts of the washer system.

(Continued)

Caution (Continued)

- When using concentrated washer fluid, follow the manufacturer instructions for adding water.
- Fill the washer fluid tank only three-quarters full when it is very cold. This allows for fluid expansion if freezing occurs, which could damage the tank if it is completely full.

Brakes

Disc brake pads have built-in wear indicators that make a high-pitched warning sound when the brake pads are worn and new pads are needed. The sound can come and go or can be heard all the time when the vehicle is moving, except when applying the brake pedal firmly.

⚠ Warning

The brake wear warning sound means that soon the brakes will not work well. That could lead to a crash. When the brake wear warning sound is heard, have the vehicle serviced.

Caution

Continuing to drive with worn-out brake pads could result in costly brake repair.

Some driving conditions or climates can cause a brake squeal when the brakes are first applied or lightly applied. This does not mean something is wrong with the brakes.

If equipped with high performance brake linings, there could be an increased build-up of brake dust as well as minor noises as compared to standard brake linings.

Properly torqued wheel nuts are necessary to help prevent brake pulsation. When tires are rotated, inspect brake pads for wear and evenly tighten wheel nuts in the proper sequence to torque specifications. See *Capacities and Specifications* ⇨ *320*.

Brake pads should be replaced as complete sets.

Brake Pedal Travel

See your dealer if the brake pedal does not return to normal height, or if there is a rapid increase in pedal travel. This could be a sign that brake service may be required.

Replacing Brake System Parts

Always replace brake system parts with new, approved replacement parts. If this is not done, the brakes may not work properly. The braking performance expected can change in many other ways if the wrong replacement brake parts are installed or if parts are improperly installed.

Cold Weather Brake Operation (SS Model)

High performance brake components may bind and clunk when moving the vehicle. This may be noticeable after parking when the brakes have been wet, such as when driving in the rain or after a car wash. This is normal for brakes with high friction pads and does not affect the operation of the brakes. Apply the brakes several times until the binding or clunking stops. Drive the vehicle and apply the brakes several times if it is washed before long-term storage.

Brake Fluid

The brake/clutch master cylinder reservoir is filled with GM approved DOT 3 brake fluid as indicated on

the reservoir cap. See *Engine Compartment Overview* ⇨ *224* for the location of the reservoir.

Checking Brake Fluid

Place the vehicle in P (Park) or Neutral with the parking brake applied if equipped with a manual transmission. On a level surface, the brake fluid level should be between the minimum and maximum marks on the brake fluid reservoir.

There are only two reasons why the brake fluid level in the reservoir may go down:

- Normal brake lining wear. When new linings are installed, the fluid level goes back up.
- A fluid leak in the brake/clutch hydraulic system. Have the brake/clutch hydraulic system fixed. With a leak, the brakes will not work well.

Always clean the brake fluid reservoir cap and the area around the cap before removing it.

Do not top off the brake/clutch fluid. Adding fluid does not correct a leak. If fluid is added when the linings are worn, there will be too much fluid when new brake linings are installed. Add or remove fluid, as necessary, only when work is done on the brake/clutch hydraulic system.

⚠ Warning

If too much brake fluid is added, it can spill on the engine and burn, if the engine is hot enough. You or others could be burned, and the vehicle could be damaged. Add brake fluid only when work is done on the brake/clutch hydraulic system.

When the brake/clutch fluid falls to a low level, the brake warning light comes on. See *Brake System Warning Light* ⇨ *112*.

Brake fluid absorbs water over time which degrades the effectiveness of the brake fluid. Replace brake fluid at the specified intervals to prevent increased stopping distance. See *Maintenance Schedule* ⇨ *306*.

What to Add

Use only GM approved DOT 3 brake fluid from a clean, sealed container. See *Recommended Fluids and Lubricants* ⇨ *315*.

⚠ Warning

The wrong or contaminated brake fluid could result in damage to the brake system. This could result in the loss of braking leading to a possible injury. Always use the proper GM approved brake fluid.

Caution

If brake fluid is spilled on the vehicle's painted surfaces, the paint finish can be damaged. Immediately wash off any painted surface.

Battery - North America

The original equipment battery is maintenance free. Do not remove the cap and do not add fluid.

The battery is in the trunk, behind the trim panel, on the passenger side of the vehicle. Refer to the replacement number shown on the original battery label when a new battery is needed.

The vehicle has an Absorbed Glass Mat (AGM) 12-volt battery. Installation of a standard 12-volt battery will result in reduced 12-volt battery life. When using a 12-volt battery charger on the 12-volt AGM battery, some chargers have an AGM battery setting on the charger. If available, use the AGM setting on the charger, to limit charge voltage to 14.8 volts.

⚠ Warning

WARNING: Battery posts, terminals, and related accessories contain lead and lead

(Continued)

Warning (Continued)

compounds, chemicals known to the State of California to cause cancer and birth defects or other reproductive harm. Batteries also contain other chemicals known to the State of California to cause cancer. **WASH HANDS AFTER HANDLING.** For more information go to www.P65Warnings.ca.gov/passenger-vehicle.

See *California Proposition 65 Warning* ⇨ *220* and the back cover.

Vehicle Storage

⚠ Warning

Batteries have acid that can burn you and gas that can explode. You can be badly hurt if you are not careful. See *Jump Starting - North America* ⇨ *289* for tips on working around a battery without getting hurt.

Infrequent Usage: Remove the black, negative (−) cable from the battery to keep the battery from running down.

Extended Storage: Remove the black, negative (−) cable from the battery or use a battery trickle charger.

Rear Axle

When to Check Lubricant

It is not necessary to regularly check the rear axle fluid, unless a leak is suspected or an unusual noise is heard. A fluid loss could indicate a problem. Have it inspected and repaired by your dealer.

Starter Switch Check

⚠ Warning

When you are doing this inspection, the vehicle could move suddenly. If the vehicle moves, you or others could be injured.

1. Before starting this check, be sure there is enough room around the vehicle.
2. Apply both the parking brake and the regular brake.

   Do not use the accelerator pedal, and be ready to turn off the engine immediately if it starts.
3. For automatic transmission vehicles, try to start the engine in each gear. The vehicle should start only in P (Park) or N (Neutral). If the vehicle starts in any other position, contact your dealer for service.

   For manual transmission vehicles, put the shift lever in Neutral, push the clutch pedal down halfway, and try to start the engine. The vehicle should start only when the clutch pedal is pushed down all the way to the floor. If the vehicle starts when the clutch pedal is not pushed all the way down, contact your dealer for service.

Automatic Transmission Shift Lock Control Function Check

⚠ Warning

When you are doing this inspection, the vehicle could move suddenly. If the vehicle moves, you or others could be injured.

1. Before starting this check, be sure there is enough room around the vehicle. It should be parked on a level surface.
2. Apply the parking brake. Be ready to apply the regular brake immediately if the vehicle begins to move.
3. With the engine off, turn the ignition on, but do not start the engine. Without applying the regular brake, try to move the shift lever out of P (Park) with normal effort. If the shift lever moves out of P (Park), contact your dealer for service.

Park Brake and P (Park) Mechanism Check

⚠ Warning

When you are doing this check, the vehicle could begin to move. You or others could be injured and property could be damaged. Make sure there is room in front of the vehicle in case it begins to roll. Be ready to apply the regular brake at once should the vehicle begin to move.

Park on a fairly steep hill, with the vehicle facing downhill. Keeping your foot on the regular brake, set the parking brake.

- To check the parking brake's holding ability: With the engine running and the transmission in N (Neutral), slowly remove foot pressure from the regular brake pedal. Do this until the vehicle is held by the parking brake only.
- To check the P (Park) mechanism's holding ability: With the engine running, shift to P (Park). Then release the parking brake followed by the regular brake.

Contact your dealer if service is required.

Wiper Blade Replacement

Windshield wiper blades should be inspected for wear and cracking. See *Maintenance Schedule* ⇨ *306*.

Replacement blades come in different types and are removed in different ways. For proper type and length, see *Maintenance Replacement Parts* ⇨ *317*.

To replace the windshield wiper blade:

Caution
Keep the hood closed to avoid damaging the paint.

1. Pull the windshield wiper assembly away from the windshield.

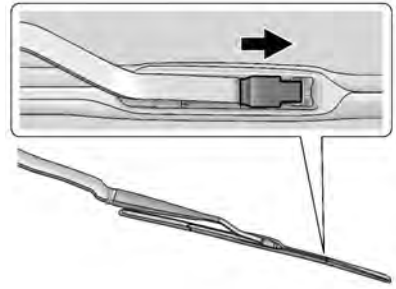

2. Lift up on the latch in the middle of the wiper blade where the wiper arm attaches.
3. With the latch open, pull the wiper blade down toward the windshield far enough to release it from the J-hooked end of the wiper arm.
4. Remove the wiper blade.

Caution
Allowing the wiper arm to touch the windshield when no wiper blade is installed could damage
(Continued)

Caution (Continued)

the windshield. Any damage that occurs would not be covered by the vehicle warranty. Do not allow the wiper arm to touch the windshield.

5. Reverse Steps 1–3 for wiper blade replacement.

Windshield Replacement

HUD System

The windshield is part of the HUD system. If the windshield must be replaced, get one that is designed for HUD or the HUD image may look out of focus.

Driver Assistance Systems

If the windshield needs to be replaced and the vehicle is equipped with a front camera sensor for the Driver Assistance Systems, a GM replacement windshield is recommended. The replacement windshield must be installed according to GM specifications for proper alignment. If it is not, these systems may not work properly, they may display messages, or they may not work at all. See your dealer for proper windshield replacement.

Gas Strut(s)

This vehicle is equipped with gas strut(s) to provide assistance in lifting and holding open the hood/trunk/liftgate system in full open position.

⚠ Warning

If the gas struts that hold open the hood, trunk, and/or liftgate fail, you or others could be seriously injured. Take the vehicle to your dealer for service immediately. Visually inspect the gas struts for signs of wear, cracks, or other damage periodically. Check to make sure the hood/trunk/liftgate is held open with enough force. If struts are failing to hold the

(Continued)

Warning (Continued)

hood/trunk/liftgate, do not operate. Have the vehicle serviced.

Caution

Do not apply tape or hang any objects from gas struts. Also do not push down or pull on gas struts. This may cause damage to the vehicle.

See *Maintenance Schedule* ⇨ *306*.

Hood

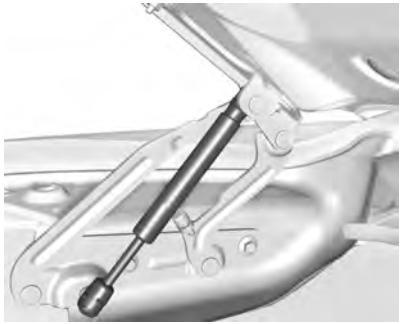

Trunk

Liftgate

Headlamp Aiming

Front Headlamp Aiming

Headlamp aim has been preset and should need no further adjustment.

If the vehicle is damaged in a crash, the headlamp aim may be affected. If adjustment to the headlamps is necessary, see your dealer.

Bulb Replacement

For the proper type of replacement bulbs, or any bulb changing procedure not listed in this section, contact your dealer.

Caution

Do not replace incandescent bulbs with aftermarket LED replacement bulbs. This can cause damage to the vehicle electrical system.

Halogen Bulbs

⚠ Warning

Halogen bulbs have pressurized gas inside and can burst if you drop or scratch the bulb. You or others could be injured. Be sure to read and follow the instructions on the bulb package.

High Intensity Discharge (HID) Lighting

⚠ Warning

The High Intensity Discharge (HID) lighting system operates at a very high voltage. If you try to service any of the system components, you could be seriously injured. Have your dealer or a qualified technician service them.

After an HID headlamp bulb has been replaced, the beam might be a slightly different shade than it was originally. This is normal.

LED Lighting

This vehicle has several LED lamps. For replacement of any LED lighting assembly, contact your dealer.

Back-Up Lamps

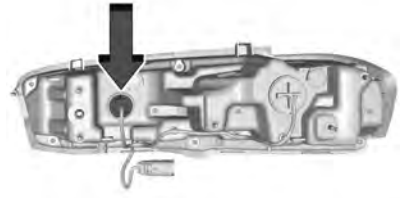

For the base and the uplevel taillamp assembly, only the back-up bulb is replaceable. Removal of the taillamp assembly is not necessary to change this bulb.

To replace one of these bulbs:

1. Open the trunk. See *Trunk* ⇨ *22*.
2. Remove the three pushpin fasteners and cover.
3. Turn the bulb socket counterclockwise to remove it.

4. Pull the old bulb straight out of the bulb socket.
5. Push the new bulb straight into the bulb socket until it clicks.
6. Turn the bulb socket clockwise to reinstall.
7. Install the three pushpin fasteners and cover.

License Plate Lamp

To replace one of these bulbs:

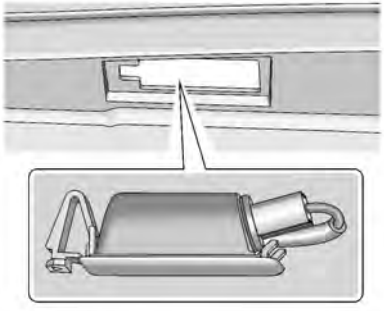

1. Unclip the license plate lamp from the fascia opening.
2. Pull the license plate lamp down through the fascia opening.
3. Turn the bulb socket counterclockwise and pull the bulb straight out of the lamp socket.
4. Install the new bulb.
5. Push the bulb straight into the socket and turn clockwise to reinstall.
6. Reinstall the license plate lamp by lifting it through the fascia opening until the clip is in place.

Electrical System

Electrical System Overload

The vehicle has fuses and circuit breakers to protect against an electrical system overload.

When the current electrical load is too heavy, the circuit breaker opens and closes, protecting the circuit until the current load returns to normal or the problem is fixed. This greatly reduces the chance of circuit overload and fire caused by electrical problems.

Fuses and circuit breakers protect power devices in the vehicle.

Replace a bad fuse with a new one of the identical size and rating.

If there is a problem on the road and a fuse needs to be replaced, the same amperage fuse can be borrowed. Choose some feature of the vehicle that is not needed to use and replace it as soon as possible.

Headlamp Wiring

An electrical overload may cause the lamps to go on and off, or in some cases to remain off. Have the headlamp wiring checked right away if the lamps go on and off or remain off.

Windshield Wipers

If the wiper motor overheats due to heavy snow or ice, the windshield wipers will stop until the motor cools and will then restart.

Although the circuit is protected from electrical overload, overload due to heavy snow or ice may cause wiper linkage damage. Always clear ice and heavy snow from the windshield before using the windshield wipers.

If the overload is caused by an electrical problem and not snow or ice, be sure to get it fixed.

Fuses and Circuit Breakers

The wiring circuits in the vehicle are protected from short circuits by a combination of fuses and circuit breakers. This greatly reduces the chance of damage caused by electrical problems.

To check a fuse, look at the silver-colored band inside the fuse. If the band is broken or melted, replace the fuse. Be sure to replace a bad fuse with a new one of the identical size and rating.

⚠ Danger

Fuses and circuit breakers are marked with their ampere rating. Do not exceed the specified amperage rating when replacing fuses and circuit breakers. Use of an oversized fuse or circuit breaker can result in a vehicle fire. You and others could be seriously injured or killed.

Fuses of the same amperage can be temporarily borrowed from another fuse location, if a fuse goes out. Replace the fuse as soon as possible.

To identify and check fuses, circuit breakers, and relays, see *Engine Compartment Fuse Block* ⇨ *253* and *Rear Compartment Fuse Block* ⇨ *257*.

Engine Compartment Fuse Block

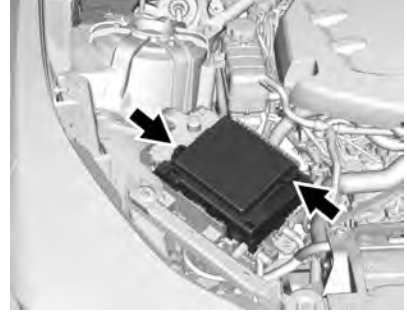

To remove the hinged fuse block cover, press the clip at the front of the cover, and swing it up.

Caution
Do not pull the engine compartment fuse block lever, since it is intended only for service purposes. If pulled, vehicle malfunction may occur.

Caution
Spilling liquid on any electrical component on the vehicle may damage it. Always keep the covers on any electrical component.

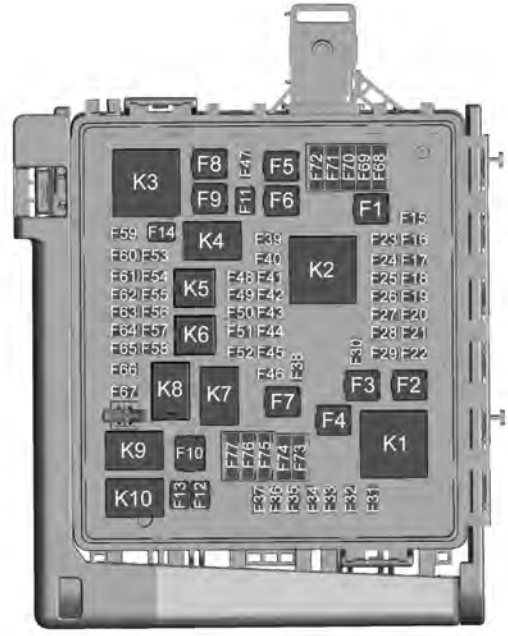

The vehicle may not be equipped with all of the fuses, relays, and features shown.

Fuses	Usage
F1	ABS pump
F2	–

Fuses	Usage
F3	Driver power seat
F4	Cooling fan
F5	Passenger power seat
F6	–
F7	–
F8	–
F9	–
F10	–
F11	AUX DRL
F12	Front wiper
F13	Starter
F14	Brake vacuum pump
F15	Automatic headlamp leveling module
F16	Front heated seat

Fuses	Usage
F17	Passenger window
F18	Body control module 4
F19	SDM/AOS
F20	OnStar/ Navigation
F21	Body control module 6
F22	ABS valve
F23	–
F24	–
F25	Electric steering column lock
F26	Body control module 2
F27	–
F28	Body control module 3
F29	Body control module 8

Fuses	Usage
F30	Windshield wiper
F31	Right HID headlamp
F32	Left HID headlamp
F33	–
F34	Horn
F35	Automatic headlamp leveling motor
F36	–
F37	Right high-beam headlamp
F38	–
F39	–
F40	Rear electrical center/Ignition
F41	Malfunction indicator lamp/ Ignition

Fuses	Usage
F42	HVAC/ISRVM/ OSRVM
F43	Rear drive control module/ICCM
F44	–
F45	Sunroof
F46	Body control module 7
F47	CGM
F48	A/C clutch
F49	Heated steering wheel
F50	Fuel system control module/ Ignition
F51	Rear exhaust valve PTSQ
F52	–
F53	–
F54	Engine coolant pump

Fuses	Usage
F55	Fuel prime
F56	–
F57	Engine control module/Ignition
F58	Transmission control module/ Ignition
F59	–
F60	Transmission control module battery
F61	Non-walk/ Vehicle
F62	Ignition coils – odd
F63	Non-walk/O2 sensor
F64	Ignition coils – even
F65	–
F66	Engine control module 1

Fuses	Usage
F67	Engine control module 2
F68	Spare
F69	Spare
F70	Spare
F71	Spare
F72	Spare
F73	Spare
F74	Spare
F75	Spare
F76	Spare
F77	Spare

Relays	Usage
K1	–
K2	Run/Crank
K3	–
K4	Vacuum pump
K5	A/C control
K6	Coolant pump

Relays	Usage
K7	Engine control module
K8	Fuel prime
K9	–
K10	Starter

Rear Compartment Fuse Block

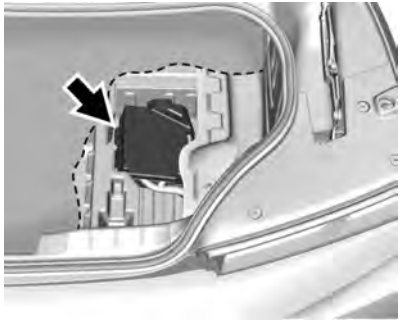

The rear compartment fuse block is on the right side under the trunk load floor.

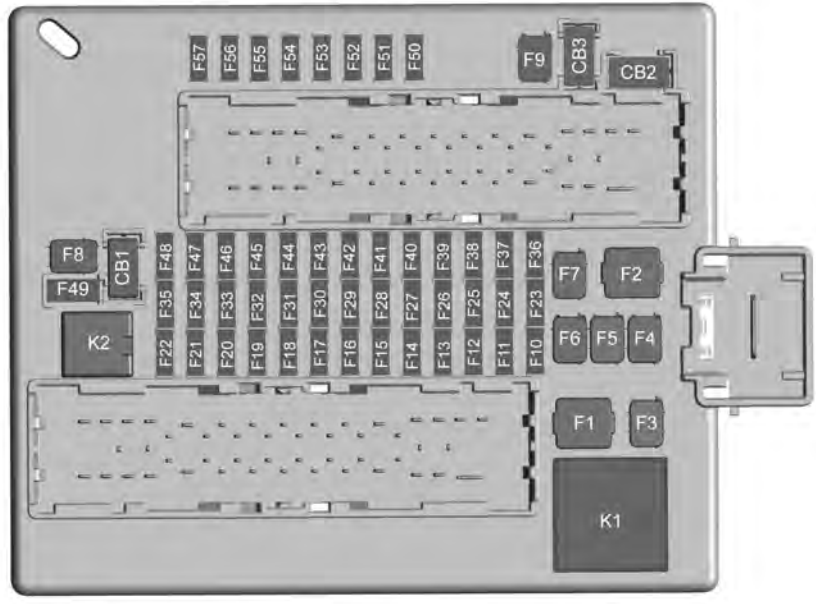

The vehicle may not be equipped with all of the fuses, relays, and features shown.

Fuses	Usage
F1	Rear window defogger

Fuses	Usage
F2	Front blower
F3	Electric parking brake
F4	–
F5	–
F6	Rear drive control module
F7	Right window
F8	–
F9	Left window
F10	Heated mirror
F11	–
F12	Heated steering wheel
F13	–
F14	HVAC control
F15	Spare
F16	Display
F17	Spare
F18	–

Fuses	Usage
F19	Front ventilated seat
F20	Spare
F21	–
F22	–
F23	Body control module
F24	–
F25	–
F26	–
F27	RGB lights
F28	Passive entry/ Passive start battery
F29	Data link connector
F30	Canister vent
F31	Power fold top
F32	Memory seat module
F33	Wireless charger

Fuses	Usage
F34	Engine control module battery
F35	Fuel system control module V6
F36	–
F37	Electric steering column lock
F38	Outside rear view mirror/ Power window
F39	Rear closure
F40	–
F41	Battery regulated voltage control
F42	SADS
F43	Rear drive control module/ICCM
F44	Folding top solenoid

Fuses	Usage
F45	Amplifier
F46	Fuel system control module V8
F47	Shunt
F48	–
F49	Steering wheel
F50	Front camera module
F51	Camera module
F52	Ultrasonic park aid
F53	–
F54	Side blind zone alert
F55	Radio
F56	–
F57	–

Relays	Usage
K1	Rear window defogger
K2	Fuel system control module

Circuit Breakers	Usage
CB1	–
CB2	Retained accessory power
CB3	–

Wheels and Tires

Tires

Every new GM vehicle has high-quality tires made by a leading tire manufacturer. See the warranty manual for information regarding the tire warranty and where to get service. For additional information refer to the tire manufacturer.

⚠ Warning

- Poorly maintained and improperly used tires are dangerous.
- Overloading the tires can cause overheating as a result of too much flexing. There could be a blowout and a serious crash. See *Vehicle Load Limits* ⇨ *170*.

(Continued)

Warning (Continued)

- Underinflated tires pose the same danger as overloaded tires. The resulting crash could cause serious injury. Check all tires frequently to maintain the recommended pressure. Tire pressure should be checked when the tires are cold.
- Overinflated tires are more likely to be cut, punctured, or broken by a sudden impact — such as when hitting a pothole. Keep tires at the recommended pressure.
- Worn or old tires can cause a crash. If the tread is badly worn, replace them.

(Continued)

Warning (Continued)

- Replace any tires that have been damaged by impacts with potholes, curbs, etc.
- Improperly repaired tires can cause a crash. Only the dealer or an authorized tire service center should repair, replace, dismount, and mount the tires.
- Do not spin the tires in excess of 56 km/h (35 mph) on slippery surfaces such as snow, mud, ice, etc. Excessive spinning may cause the tires to explode.

See *Tire Pressure for High-Speed Operation* ⇨ *268* for inflation pressure adjustment for high-speed driving.

All-Season Tires

This vehicle may come with all-season tires. These tires are designed to provide good overall performance on most road surfaces and weather conditions. Original equipment tires designed to GM's specific tire performance criteria have a TPC specification code molded onto the sidewall. Original equipment all-season tires can be identified by the last two characters of this TPC code, which will be “MS.”

Consider installing winter tires on the vehicle if frequent driving on snow or ice-covered roads is expected. All-season tires provide adequate performance for most winter driving conditions, but they may not offer the same level of traction or performance as winter tires on snow or ice-covered roads. See *Winter Tires* ⇨ *261*.

Winter Tires

This vehicle was not originally equipped with winter tires. Winter tires are designed for increased traction on snow and ice-covered roads. Consider installing winter tires on the vehicle if frequent driving on ice or snow covered roads is expected. See your dealer for details regarding winter tire availability and proper tire selection. Also, see *Buying New Tires* ⇨ *276*.

With winter tires, there may be decreased dry road traction, increased road noise, and shorter tread life. After changing to winter tires, be alert for changes in vehicle handling and braking.

If using winter tires:

- Use tires of the same brand and tread type on all four wheel positions.
- Use only radial ply tires of the same size, load range, and speed rating as the original equipment tires.

Winter tires with the same speed rating as the original equipment tires may not be available for H, V, W, Y, and ZR speed rated tires. If winter tires with a lower speed rating are chosen, never exceed the tire's maximum speed capability.

Run-Flat Tires

This vehicle, when new, may have had run-flat tires. There is no spare tire, no tire changing equipment, and no place to store a tire in the vehicle.

The vehicle also has a Tire Pressure Monitor System (TPMS) that indicates a loss of tire pressure in any of the tires.

⚠ Warning

If the low tire warning light displays on the instrument cluster, the handling capabilities will be reduced during severe maneuvers. Driving too fast could cause loss of control and you or

(Continued)

Warning (Continued)

others could be injured. Do not drive over 90 km/h (55 mph) when the low tire warning light is displayed. Drive cautiously and check the tire pressures as soon as possible.

Run-flat tires can be driven on with no air pressure. There is no need to stop on the side of the road to change the tire. Continue driving; however, do not drive too far or too fast. Driving on the tire may not be possible if there is permanent damage. To prevent permanent damage, keep speed below 80 km/h (50 mph). With a light load the vehicle can be driven up to 100 km (60 mi); with a moderate load 80 km (50 mi); and a heavy load 45 km (25 mi). As soon as possible, contact the nearest authorized GM or run-flat servicing facility for inspection and repair or replacement.

When driving on a deflated run-flat tire, avoid potholes and other road hazards that could damage the tire and/or wheel beyond repair. When a tire has been damaged, or driven any distance while deflated, check with an authorized run-flat tire service center to determine whether the tire can be repaired or should be replaced. To maintain the run-flat feature, all replacement tires must be run-flat tires.

To locate the nearest GM or run-flat servicing facility, call Customer Assistance.

Low-Profile Tires

See the Camaro High Performance supplement.

If the vehicle has 245/40R20 or 245/40ZR20 and 275/35ZR20 size tires, they are classified as low-profile tires.

Caution

Low-profile tires are more susceptible to damage from road hazards or curb impact than standard profile tires. Tire and/or wheel assembly damage can occur when coming into contact with road hazards like potholes, or sharp edged objects, or when sliding into a curb. The warranty does not cover this type of damage. Keep tires set to the correct inflation pressure and when possible, avoid contact with curbs, potholes, and other road hazards.

Summer Tires

High Performance Summer Tires

See the Camaro High Performance supplement.

This vehicle may come with 245/40ZR20 and 275/35ZR20 high performance summer tires. These tires have a special tread and compound that are optimized for maximum dry and wet road performance. This special tread and compound will have decreased performance in cold climates, and on ice and snow. It is recommended that winter tires be installed on the vehicle if frequent driving at temperatures below approximately 5 °C (40 °F) or on ice or snow covered roads is expected. See *Winter Tires* ⇨ *261*.

Caution

High performance summer tires have rubber compounds that lose flexibility and may develop surface cracks in the tread area at temperatures below −7 °C (20 °F). Always store high performance summer tires indoors and at temperatures above −7 °C (20 °F) when not in use. If the tires have been subjected to −7 °C (20 °F) or less, let them warm up in a heated space to at least 5 °C (40 °F) for

(Continued)

Caution (Continued)

24 hours or more before being installed or driving a vehicle on which they are installed. Do not apply heat or blow heated air directly on the tires. Always inspect tires before use. See *Tire Inspection* ⇨ *274*.

Tire Sidewall Labeling

Useful information about a tire is molded into its sidewall. The example shows a typical passenger tire sidewall.

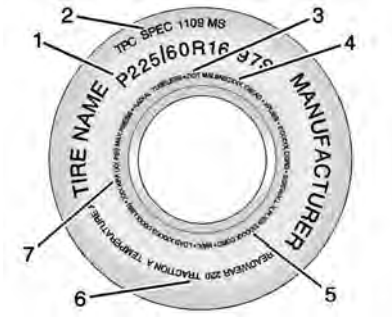

Passenger (P-Metric) Tire Example

(1) Tire Size : The tire size is a combination of letters and numbers used to define a particular tire's width, height, aspect ratio, construction type, and service description. See the “Tire Size” illustration later in this section.

(2) TPC Spec (Tire Performance Criteria Specification) : Original equipment tires designed to GM's specific tire performance criteria have a TPC specification code molded onto the sidewall. GM's TPC specifications meet or exceed all federal safety guidelines.

(3) DOT (Department of Transportation) : The Department of Transportation (DOT) code indicates that the tire is in compliance with the U.S. Department of Transportation Motor Vehicle Safety Standards.

DOT Tire Date of Manufacture : The last four digits of the TIN indicate the tire manufactured date. The first two digits represent the week (01-52) and the last two digits, the year. For example, the third week of the year 2010 would have a four-digit DOT date of 0310.

(4) Tire Identification Number (TIN) : The letters and numbers following the DOT code are the Tire Identification Number (TIN).

The TIN shows the manufacturer and plant code, tire size, and date the tire was manufactured. The TIN is molded onto both sides of the tire, although only one side may have the date of manufacture.

(5) Tire Ply Material : The type of cord and number of plies in the sidewall and under the tread.

(6) Uniform Tire Quality Grading (UTQG) : Tire manufacturers are required to grade tires based on three performance factors: treadwear, traction, and temperature resistance. For more information see *Uniform Tire Quality Grading* ⇨ *278*.

(7) Maximum Cold Inflation Load Limit : Maximum load that can be carried and the maximum pressure needed to support that load.

Tire Designations

Tire Size

The example shows a typical passenger vehicle tire size.

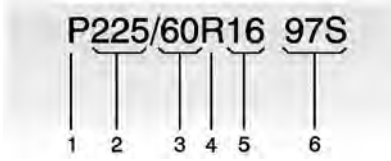

(1) Passenger (P-Metric) Tire : The United States version of a metric tire sizing system. The letter “P” as the first character in the tire size means a passenger vehicle tire engineered to standards set by the U.S. Tire and Rim Association.

(2) Tire Width : The three-digit number indicates the tire section width in millimeters from sidewall to sidewall.

(3) Aspect Ratio : A two-digit number that indicates the tire height-to-width measurements. For example, if the tire size aspect ratio is 60, as shown in item (3) of the illustration, it would mean that the tire's sidewall is 60 percent as high as it is wide.

(4) Construction Code : A letter code is used to indicate the type of ply construction in the tire. The letter “R” means radial ply construction; the letter “D” means diagonal or bias ply construction.

(5) Rim Diameter : Diameter of the wheel in inches.

(6) Service Description : These characters represent the load index and speed rating of the tire. The load index represents the load carrying capacity a tire is certified to carry. The speed rating is the maximum speed a tire is certified to carry a load.

Tire Terminology and Definitions

Air Pressure : The amount of air inside the tire pressing outward on each square inch of the tire. Air pressure is expressed in kPa (kilopascal) or psi (pounds per square inch).

Accessory Weight : The combined weight of optional accessories. Some examples of optional accessories are automatic transmission, power windows, power seats, and air conditioning.

Aspect Ratio : The relationship of a tire's height to its width.

Belt : A rubber coated layer of cords between the plies and the tread. Cords may be made from steel or other reinforcing materials.

Bead : The tire bead contains steel wires wrapped by steel cords that hold the tire onto the rim.

Bias Ply Tire : A pneumatic tire in which the plies are laid at alternate angles less than 90 degrees to the centerline of the tread.

Cold Tire Pressure : The amount of air pressure in a tire, measured in kPa (kilopascal) or psi (pounds per square inch) before a tire has built up heat from driving. See *Tire Pressure* ⇨ *267*.

Curb Weight : The weight of a motor vehicle with standard and optional equipment including the maximum capacity of fuel, oil, and coolant, but without passengers and cargo.

DOT Markings : A code molded into the sidewall of a tire signifying that the tire is in compliance with the U.S. Department of Transportation (DOT) Motor Vehicle Safety Standards. The DOT code includes the Tire Identification Number (TIN), an alphanumeric designator which can also identify the tire manufacturer, production plant, brand, and date of production.

GVWR : Gross Vehicle Weight Rating. See *Vehicle Load Limits* ⇨ *170*.

GAWR FRT : Gross Axle Weight Rating for the front axle. See *Vehicle Load Limits* ⇨ *170*.

GAWR RR : Gross Axle Weight Rating for the rear axle. See *Vehicle Load Limits* ⇨ *170*.

Intended Outboard Sidewall : The side of an asymmetrical tire that must always face outward when mounted on a vehicle.

Kilopascal (kPa) : The metric unit for air pressure.

Light Truck (LT-Metric) Tire : A tire used on light duty trucks and some multipurpose passenger vehicles.

Load Index : An assigned number ranging from 1 to 279 that corresponds to the load carrying capacity of a tire.

Maximum Inflation Pressure : The maximum air pressure to which a cold tire can be inflated. The maximum air pressure is molded onto the sidewall.

Maximum Load Rating : The load rating for a tire at the maximum permissible inflation pressure for that tire.

Maximum Loaded Vehicle Weight : The sum of curb weight, accessory weight, vehicle capacity weight, and production options weight.

Normal Occupant Weight : The number of occupants a vehicle is designed to seat multiplied by 68 kg (150 lb). See *Vehicle Load Limits* ⇨ *170*.

Occupant Distribution : Designated seating positions.

Outward Facing Sidewall : The side of an asymmetrical tire that has a particular side that faces outward when mounted on a vehicle. The side of the tire that contains a whitewall, bears white lettering, or bears manufacturer, brand, and/or model name molding that is higher or deeper than the same moldings on the other sidewall of the tire.

Passenger (P-Metric) Tire : A tire used on passenger cars and some light duty trucks and multipurpose vehicles.

Recommended Inflation Pressure : Vehicle manufacturer's recommended tire inflation pressure as shown on the tire placard. See *Tire Pressure* ⇨ *267* and *Vehicle Load Limits* ⇨ *170*.

Radial Ply Tire : A pneumatic tire in which the ply cords that extend to the beads are laid at 90 degrees to the centerline of the tread.

Rim : A metal support for a tire and upon which the tire beads are seated.

Sidewall : The portion of a tire between the tread and the bead.

Speed Rating : An alphanumeric code assigned to a tire indicating the maximum speed at which a tire can operate.

Traction : The friction between the tire and the road surface. The amount of grip provided.

Tread : The portion of a tire that comes into contact with the road.

Treadwear Indicators : Narrow bands, sometimes called wear bars, that show across the tread of a tire when only 1.6 mm (1/16 in) of tread remains. See *When It Is Time for New Tires* ⇨ *275*.

UTQGS (Uniform Tire Quality Grading Standards) : A tire information system that provides consumers with ratings for a tire's traction, temperature, and treadwear. Ratings are determined by tire manufacturers using government testing procedures. The ratings are molded into the sidewall of the tire. See *Uniform Tire Quality Grading* ⇨ *278*.

Vehicle Capacity Weight : The number of designated seating positions multiplied by 68 kg (150 lb) plus the rated cargo load. See *Vehicle Load Limits* ⇨ *170*.

Vehicle Maximum Load on the Tire : Load on an individual tire due to curb weight, accessory weight, occupant weight, and cargo weight.

Vehicle Placard : A label permanently attached to a vehicle showing the vehicle capacity weight and the original equipment tire size and recommended inflation pressure. See “Tire and Loading Information Label” under *Vehicle Load Limits* ⇨ *170*.

Tire Pressure

Tires need the correct amount of air pressure to operate effectively.

⚠ Warning

Neither tire underinflation nor overinflation is good. Underinflated tires, or tires that do not have enough air, can result in:

- Tire overloading and overheating, which could lead to a blowout.
- Premature or irregular wear.
- Poor handling.
- Reduced fuel economy.

Overinflated tires, or tires that have too much air, can result in:

- Unusual wear.
- Poor handling.
- Rough ride.
- Needless damage from road hazards.

The Tire and Loading Information label on the vehicle indicates the original equipment tires and the correct cold tire inflation pressures. The recommended pressure is the minimum air pressure needed to support the vehicle's maximum load carrying capacity. See *Vehicle Load Limits* ⇨ *170*.

How the vehicle is loaded affects vehicle handling and ride comfort. Never load the vehicle with more weight than it was designed to carry.

When to Check

Check the pressure of the tires once a month or more.

How to Check

Use a good quality pocket-type gauge to check the tire pressure. Proper tire inflation cannot be determined by looking at the tire. Check the tire inflation pressure when the tires are cold, meaning the vehicle has not been driven for at least three hours or no more than 1.6 km (1 mi).

Remove the valve cap from the tire valve stem. Press the tire gauge firmly onto the valve to get the pressure measurement. If the cold tire inflation pressure matches the recommended pressure on the Tire and Loading Information label, no further adjustment is necessary.

If the inflation pressure is low, add air until the recommended pressure is reached. If the inflation pressure in high, press on the metal stem in the center of the tire valve to release air. Re-check the tire pressure with the tire gauge.

Put the valve caps back on the valve stems to keep out dirt and moisture and prevent leaks. Use only valve caps designed for the vehicle by GM. TPMS sensors could be damaged and would not be covered by the vehicle warranty.

Tire Pressure for High-Speed Operation

See the Camaro High Performance supplement.

⚠ Warning

Driving at high speeds, 160 km/h (100 mph) or higher, puts additional strain on tires. Sustained high-speed driving causes excessive heat buildup and can cause sudden tire failure. This could cause a crash, and you or others could be killed. Some high-speed rated tires require inflation pressure adjustment for high-speed operation. When speed limits and road conditions allow the vehicle to be driven at high speeds, make sure the tires are rated for

(Continued)

Warning (Continued)

high-speed operation, are in excellent condition, and are set to the correct cold tire inflation pressure for the vehicle load.

Vehicles with 245/40ZR20 95Y and 275/35ZR20 98Y size tires, have tires capable of high-speed use.

Make sure vehicles with 245/40ZR20 95Y and 275/35ZR20 98Y size tires are inflated to the recommended cold inflation pressures before operating the vehicle at speeds over 160 km/h (100 mph). See *Vehicle Load Limits* ⇨ *170* and *Tire Pressure* ⇨ *267*.

Return the tires to the recommended cold tire inflation pressure when high-speed driving has ended. See *Vehicle Load Limits* ⇨ *170* and *Tire Pressure* ⇨ *267*.

Tire Pressure Monitor System

The Tire Pressure Monitor System (TPMS) uses radio and sensor technology to check tire pressure levels. The TPMS sensors monitor the air pressure in your tires and transmit tire pressure readings to a receiver located in the vehicle.

Each tire, including the spare (if provided), should be checked monthly when cold and inflated to the inflation pressure recommended by the vehicle manufacturer on the vehicle placard or tire inflation pressure label. (If your vehicle has tires of a different size than the size indicated on the vehicle placard or tire inflation pressure label, you should determine the proper tire inflation pressure for those tires.)

As an added safety feature, your vehicle has been equipped with a tire pressure monitoring system (TPMS) that illuminates a low tire pressure telltale when one or more of your tires is significantly under-inflated.

Accordingly, when the low tire pressure telltale illuminates, you should stop and check your tires as soon as possible, and inflate them to the proper pressure. Driving on a significantly under-inflated tire causes the tire to overheat and can lead to tire failure. Under-inflation also reduces fuel efficiency and tire tread life, and may affect the vehicle's handling and stopping ability.

Please note that the TPMS is not a substitute for proper tire maintenance, and it is the driver's responsibility to maintain correct tire pressure, even if under-inflation has not reached the level to trigger illumination of the TPMS low tire pressure telltale.

Your vehicle has also been equipped with a TPMS malfunction indicator to indicate when the system is not operating properly. The TPMS malfunction indicator is combined with the low tire pressure telltale. When the system detects a malfunction, the telltale will flash for approximately one minute and then

remain continuously illuminated. This sequence will continue upon subsequent vehicle start-ups as long as the malfunction exists.

When the malfunction indicator is illuminated, the system may not be able to detect or signal low tire pressure as intended. TPMS malfunctions may occur for a variety of reasons, including the installation of replacement or alternate tires or wheels on the vehicle that prevent the TPMS from functioning properly. Always check the TPMS malfunction telltale after replacing one or more tires or wheels on your vehicle to ensure that the replacement or alternate tires and wheels allow the TPMS to continue to function properly.

See *Tire Pressure Monitor Operation* ⇨ *270*.

See *Radio Frequency Statement* ⇨ *334*.

Tire Pressure Monitor Operation

This vehicle may have a Tire Pressure Monitor System (TPMS). The TPMS is designed to warn the driver when a low tire pressure condition exists. TPMS sensors are mounted onto each tire and wheel assembly, excluding the spare tire and wheel assembly. The TPMS sensors monitor the air pressure in the tires and transmit the tire pressure readings to a receiver located in the vehicle.

When a low tire pressure condition is detected, the TPMS illuminates the low tire pressure warning light on the instrument cluster. If the warning light comes on, stop as soon as possible and inflate the tires to the recommended pressure shown on the Tire and Loading Information label. See *Vehicle Load Limits* ⇨ *170*.

A message to check the pressure in a specific tire displays in the Driver Information Center (DIC). The low tire pressure warning light and the DIC warning message come on at each ignition cycle until the tires are inflated to the correct inflation pressure. Using the DIC, tire pressure levels can be viewed. For additional information and details about the DIC operation and displays see *Driver Information Center (DIC)* ⇨ *117*.

The low tire pressure warning light may come on in cool weather when the vehicle is first started, and then turn off as the vehicle is driven. This could be an early indicator that the air pressure is getting low and needs to be inflated to the proper pressure.

A Tire and Loading Information label, attached to your vehicle, shows the size of the original equipment tires and the correct inflation pressure for the tires when

they are cold. See *Vehicle Load Limits* ⇨ *170*, for an example of the Tire and Loading Information label and its location. Also see *Tire Pressure* ⇨ *267*.

The TPMS can warn about a low tire pressure condition but it does not replace normal tire maintenance. See *Tire Inspection* ⇨ *274*, *Tire Rotation* ⇨ *274* and *Tires* ⇨ *259*.

Caution

Tire sealant materials are not all the same. A non-approved tire sealant could damage the TPMS sensors. TPMS sensor damage caused by using an incorrect tire sealant is not covered by the vehicle warranty. Always use only the GM approved tire sealant available through your dealer or included in the vehicle.

Factory-installed Tire Inflator Kits use a GM approved liquid tire sealant. Using non-approved tire sealants could damage the TPMS sensors. See *Tire Sealant and Compressor Kit* ⇨ *282* for information regarding the inflator kit materials and instructions.

TPMS Malfunction Light and Message

The TPMS will not function properly if one or more of the TPMS sensors are missing or inoperable. When the system detects a malfunction, the low tire pressure warning light flashes for about one minute and then stays on for the remainder of the ignition cycle. A DIC warning message also displays. The malfunction light and DIC warning message come on at each ignition cycle until the problem is corrected. Some of the conditions that can cause these to come on are:

- One of the road tires has been replaced with the spare tire. The spare tire does not have a TPMS sensor. The malfunction light and DIC message should go off after the road tire is replaced and the sensor matching process is performed successfully. See “TPMS Sensor Matching Process” later in this section.
- The TPMS sensor matching process was not done or not completed successfully after rotating the tires. The malfunction light and the DIC message should go off after successfully completing the sensor matching process. See "TPMS Sensor Matching Process" later in this section.
- One or more TPMS sensors are missing or damaged. The malfunction light and the DIC message should go off when the TPMS sensors are installed and the sensor matching process is performed successfully. See your dealer for service.
- Replacement tires or wheels do not match the original equipment tires or wheels. Tires and wheels other than those recommended could prevent the TPMS from functioning properly. See *Buying New Tires* ⇨ *276*.

- Operating electronic devices or being near facilities using radio wave frequencies similar to the TPMS could cause the TPMS sensors to malfunction.

If the TPMS is not functioning properly it cannot detect or signal a low tire pressure condition. See your dealer for service if the TPMS malfunction light and DIC message comes on and stays on.

Tire Fill Alert (If Equipped)

This feature provides visual and audible alerts outside the vehicle to help when inflating an underinflated tire to the recommended cold tire pressure.

When the low tire pressure warning light comes on:

1. Park the vehicle in a safe, level place.
2. Set the parking brake firmly.
3. Place the vehicle in P (Park).
4. Add air to the tire that is underinflated. The turn signal lamp will flash.
5. When the recommended pressure is reached, the horn sounds once and the turn signal lamp will stop flashing and briefly turn solid.

Repeat these steps for all underinflated tires that have illuminated the low tire pressure warning light.

⚠ Warning

Overinflating a tire could cause the tire to rupture and you or others could be injured. Do not exceed the maximum pressure listed on the tire sidewall. See *Tire Sidewall Labeling* ⇨ *263* and *Vehicle Load Limits* ⇨ *170*.

If the tire is overinflated by more than 35 kPa (5 psi), the horn will sound multiple times and the turn signal lamp will continue to flash for several seconds after filling stops. To release and correct the pressure while the turn signal lamp is still flashing, briefly press the center of the valve stem. When the recommended pressure is reached, the horn sounds once.

If the turn signal lamp does not flash within 15 seconds after starting to inflate the tire, the tire fill alert has not been activated or is not working.

If the hazard warning flashers are on, the tire fill alert visual feedback will not work properly.

The TPMS will not activate the tire fill alert properly under the following conditions:

- There is interference from an external device or transmitter.
- The air pressure from the inflation device is not sufficient to inflate the tire.
- There is a malfunction in the TPMS.
- There is a malfunction in the horn or turn signal lamps.
- The identification code of the TPMS sensor is not registered to the system.

- The battery of the TPMS sensor is low.

If the tire fill alert does not operate due to TPMS interference, move the vehicle about 1 m (3 ft) back or forward and try again. If the tire fill alert feature is not working, use a tire pressure gauge.

TPMS Sensor Matching Process

Each TPMS sensor has a unique identification code. The identification code needs to be matched to a new tire/wheel position after rotating the vehicle's tires or replacing one or more of the TPMS sensors. The TPMS sensor matching process should also be performed after replacing a spare tire with a road tire containing the TPMS sensor. The malfunction light and the DIC message should go off at the next ignition cycle. The sensors are matched to the tire/wheel positions, using a TPMS relearn tool, in the following order: driver side front tire, passenger side front tire, passenger side rear tire, and driver side rear.

See your dealer for service or to purchase a relearn tool. A TPMS relearn tool can also be purchased. See Tire Pressure Monitor Sensor Activation Tool at www.gmtoolsandequipment.com or call 1-800-GM TOOLS (1-800-468-6657).

There are two minutes to match the first tire/wheel position, and five minutes overall to match all four tire/wheel positions. If it takes longer, the matching process stops and must be restarted.

The TPMS sensor matching process is:

1. Set the parking brake.
2. Place the vehicle in Service Mode. See *Ignition Positions* ⇨ *175*.
3. Make sure the Tire Pressure info display option is turned on. The info displays on the DIC can be turned on and off through the Options menu. See *Driver Information Center (DIC)* ⇨ *117*.
4. Use the five-way DIC control on the right side of the steering wheel to scroll to the Tire Pressure screen under the DIC info page. See *Driver Information Center (DIC)* ⇨ *117*.
5. Press and hold SEL in the center of the five-way DIC control.

   The horn sounds twice to signal the receiver is in relearn mode and the TIRE LEARNING ACTIVE message displays on the DIC screen.
6. Start with the driver side front tire.
7. Place the relearn tool against the tire sidewall, near the valve stem. Then press the button to activate the TPMS sensor. A horn chirp confirms that the sensor identification code has been matched to this tire and wheel position.
8. Proceed to the passenger side front tire, and repeat Step 7.

9. Proceed to the passenger side rear tire, and repeat Step 7.
10. Proceed to the driver side rear tire, and repeat Step 7. The horn sounds two times to indicate the sensor identification code has been matched to the driver side rear tire, and the TPMS sensor matching process is no longer active. The TIRE LEARNING ACTIVE message on the DIC display screen goes off.
11. Turn the vehicle off.
12. Set all four tires to the recommended air pressure level as indicated on the Tire and Loading Information label.

Tire Inspection

We recommend that the tires, including the spare tire, if the vehicle has one, be inspected for signs of wear or damage at least once a month.

Replace the tire if:

- The indicators at three or more places around the tire can be seen.
- There is cord or fabric showing through the tire's rubber.
- The tread or sidewall is cracked, cut, or snagged deep enough to show cord or fabric.
- The tire has a bump, bulge, or split.
- The tire has a puncture, cut, or other damage that cannot be repaired well because of the size or location of the damage.

Tire Rotation

Tires should be rotated every 12 000 km/7,500 mi. See *Maintenance Schedule* ⇨ *306*.

Tires are rotated to achieve a uniform wear for all tires. The first rotation is the most important.

Anytime unusual wear is noticed, rotate the tires as soon as possible, check for proper tire inflation pressure, and check for damaged tires or wheels. If the unusual wear continues after the rotation, check the wheel alignment. See *When It Is Time for New Tires* ⇨ *275* and *Wheel Replacement* ⇨ *280*.

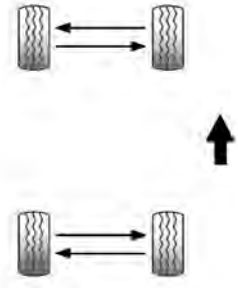

Use this rotation pattern if the vehicle has different size tires on the front and rear.

Different tire sizes should not be rotated front to rear.

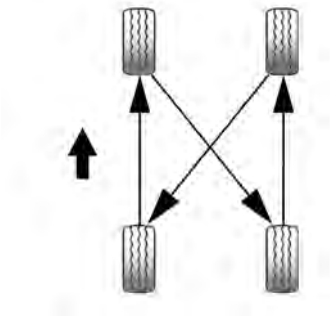

Use this rotation pattern when rotating tires of the same size installed on all four wheel positions.

If the vehicle has a compact spare tire, do not include it in the tire rotation.

Adjust the front and rear tires to the recommended inflation pressure on the Tire and Loading Information label after the tires have been rotated. See *Tire Pressure* ⇨ *267* and *Vehicle Load Limits* ⇨ *170*.

Reset the Tire Pressure Monitor System. See *Tire Pressure Monitor Operation* ⇨ *270*.

Check that all wheel nuts are properly tightened. See “Wheel Nut Torque” under *Capacities and Specifications* ⇨ *320*.

⚠ Warning

Rust or dirt on a wheel, or on the parts to which it is fastened, can make wheel nuts become loose after time. The wheel could come off and cause a crash. When changing a wheel, remove any rust or dirt from places where

(Continued)

Warning (Continued)

the wheel attaches to the vehicle. In an emergency, a cloth or a paper towel can be used; however, use a scraper or wire brush later to remove all rust or dirt.

Lightly coat the inner diameter of the wheel hub opening with wheel bearing grease after a wheel change or tire rotation to prevent corrosion or rust build-up. Do not get grease on the wheel mounting surface or on the wheel nuts or bolts.

When It Is Time for New Tires

Factors such as maintenance, temperatures, driving speeds, vehicle loading, and road conditions affect the wear rate of the tires.

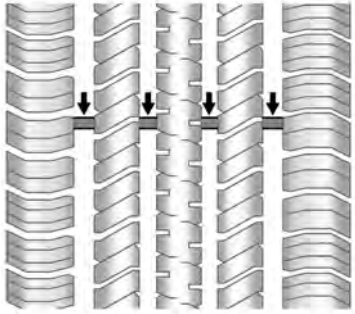

Treadwear indicators are one way to tell when it is time for new tires. Treadwear indicators appear when the tires have only 1.6 mm (1/16 in) or less of tread remaining. See *Tire Inspection* ⇨ *274* and *Tire Rotation* ⇨ *274*.

The rubber in tires ages over time. This also applies to the spare tire, if the vehicle has one, even if it is never used. Multiple factors including temperatures, loading conditions, and inflation pressure maintenance affect how fast aging takes place. GM recommends that tires, including the spare if equipped, be replaced after six years, regardless of tread wear. To identify the age of a tire, use the tire manufacture date which is the last four digits of the DOT Tire Identification Number (TIN) which is molded into one side of the tire sidewall. The first two digits represent the week (01–52) and the last two digits, the year. For example, the third week of the year 2010 would have a four-digit DOT date of 0310.

Vehicle Storage

Tires age when stored normally mounted on a parked vehicle. Park a vehicle that will be stored for at least a month in a cool, dry, clean area away from direct sunlight to slow aging. This area should be free of grease, gasoline, or other substances that can deteriorate rubber.

Parking for an extended period can cause flat spots on the tires that may result in vibrations while driving. When storing a vehicle for at least a month, remove the tires or raise the vehicle to reduce the weight from the tires.

Buying New Tires

GM has developed and matched specific tires for the vehicle. The original equipment tires installed were designed to meet General Motors Tire Performance Criteria Specification (TPC Spec) system rating. When replacement tires are needed, GM strongly recommends buying tires with the same TPC Spec rating.

GM's exclusive TPC Spec system considers over a dozen critical specifications that impact the overall performance of the vehicle, including brake system performance, ride and handling, traction control, and tire pressure monitoring performance. GM's TPC Spec number is molded onto the tire's sidewall near the tire size. If the

tires have an all-season tread design, the TPC Spec number will be followed by MS for mud and snow. See *Tire Sidewall Labeling* ⇨ *263*.

GM recommends replacing worn tires in complete sets of four. Uniform tread depth on all tires will help to maintain the performance of the vehicle. Braking and handling performance may be adversely affected if all the tires are not replaced at the same time. If proper rotation and maintenance have been done, all four tires should wear out at about the same time. See *Tire Rotation* ⇨ *274*. However, if it is necessary to replace only one axle set of worn tires, place the new tires on the rear axle.

Winter tires with the same speed rating as the original equipment tires may not be available for H, V, W, Y and ZR speed rated tires. Never exceed the winter tires' maximum speed capability when using winter tires with a lower speed rating.

⚠ Warning

Tires could explode during improper service. Attempting to mount or dismount a tire could cause injury or death. Only your dealer or authorized tire service center should mount or dismount the tires.

⚠ Warning

Mixing tires of different sizes, brands, or types may cause loss of control of the vehicle, resulting in a crash or other vehicle damage. Use the correct size, brand, and type of tires on all wheels.

⚠ Warning

Using bias-ply tires on the vehicle may cause the wheel rim flanges to develop cracks after many miles of driving. A tire and/or wheel could fail suddenly and cause a crash. Use only radial-ply tires with the wheels on the vehicle.

If the vehicle tires must be replaced with a tire that does not have a TPC Spec number, make sure they are the same size, load range, speed rating, and construction (radial) as the original tires.

Vehicles that have a tire pressure monitoring system could give an inaccurate low-pressure warning if non-TPC Spec rated tires are installed. See *Tire Pressure Monitor System* ⇨ *269*.

The Tire and Loading Information label indicates the original equipment tires on the vehicle. See *Vehicle Load Limits* ⇨ *170*.

Different Size Tires and Wheels

If wheels or tires are installed that are a different size than the original equipment wheels and tires, vehicle performance, including its braking, ride and handling characteristics, stability, and resistance to rollover may be affected. If the vehicle has electronic systems such as antilock brakes, rollover airbags, traction control, electronic stability control, or All-Wheel Drive, the performance of these systems can also be affected.

⚠ Warning

If different sized wheels are used, there may not be an acceptable level of performance and safety if

(Continued)

Warning (Continued)

tires not recommended for those wheels are selected. This increases the chance of a crash and serious injury. Only use GM specific wheel and tire systems developed for the vehicle, and have them properly installed by a GM certified technician.

See *Buying New Tires* ⇨ *276* and *Accessories and Modifications* ⇨ *221*.

Uniform Tire Quality Grading

The following information relates to the system developed by the United States National Highway Traffic Safety Administration (NHTSA), which grades tires by treadwear, traction, and temperature performance. This applies only to vehicles sold in the United States. The grades are molded on the sidewalls of most passenger car tires. The Uniform Tire Quality Grading (UTQG) system does not apply to deep tread, winter tires, compact spare tires, tires with nominal rim diameters of 10 to 12 inches (25 to 30 cm), or to some limited-production tires.

While the tires available on General Motors passenger cars and light trucks may vary with respect to these grades, they must also conform to federal safety requirements and additional General Motors Tire Performance Criteria (TPC) standards.

Quality grades can be found where applicable on the tire sidewall between tread shoulder and maximum section width. For example:

Treadwear 200 Traction AA Temperature A

All Passenger Car Tires Must Conform to Federal Safety Requirements In Addition To These Grades.

Treadwear

The treadwear grade is a comparative rating based on the wear rate of the tire when tested under controlled conditions on a specified government test course. For example, a tire graded 150 would wear one and one-half (1½) times as well on the government course as a tire graded 100. The relative performance of tires depends upon the actual conditions of their use, however, and may depart significantly from the norm due to variations in driving habits, service practices and differences in road characteristics and climate.

Traction

The traction grades, from highest to lowest, are AA, A, B, and C. Those grades represent the tire's ability to stop on wet pavement as measured under controlled conditions on specified government test surfaces of asphalt and concrete. A tire marked C may have poor traction performance. Warning: The traction grade assigned to this tire is based on straight-ahead braking traction tests, and does not include acceleration, cornering, hydroplaning, or peak traction characteristics.

Temperature

The temperature grades are A (the highest), B, and C, representing the tire's resistance to the generation of heat and its ability to dissipate heat when tested under controlled conditions on a specified indoor laboratory test wheel. Sustained high temperature can cause the material of the tire to degenerate and reduce tire life, and excessive temperature can lead to sudden tire failure. The grade C corresponds to a level of performance which all passenger car tires must meet under the Federal Motor Safety Standard No. 109. Grades B and A represent higher levels of performance on the laboratory test wheel than the minimum required by law. Warning: The temperature grade for this tire is established for a tire that is properly inflated and not overloaded. Excessive speed, underinflation, or excessive loading, either separately or in combination, can cause heat buildup and possible tire failure.

Wheel Alignment and Tire Balance

The tires and wheels were aligned and balanced at the factory to provide the longest tire life and best overall performance. Adjustments to wheel alignment and tire balancing are not necessary on a regular basis. Consider an alignment check if there is unusual tire wear or the vehicle is significantly pulling to one side or the other. Some slight pull to the left or right, depending on the crown of the road and/or other road surface variations such as troughs or ruts, is normal. If the vehicle is vibrating when driving on a smooth road, the tires and wheels may need to be rebalanced. See your dealer for proper diagnosis.

Wheel Replacement

Replace any wheel that is bent, cracked, or badly rusted or corroded. If wheel nuts keep coming loose, the wheel, wheel bolts, and wheel nuts should be replaced.
If the wheel leaks air, replace it.

Some aluminum wheels can be repaired. See your dealer if any of these conditions exist.

Your dealer will know the kind of wheel that is needed.

Each new wheel should have the same load-carrying capacity, diameter, width, offset, and be mounted the same way as the one it replaces.

Replace wheels, wheel bolts, wheel nuts, or Tire Pressure Monitor System (TPMS) sensors with new GM original equipment parts.

⚠ Warning

Using the wrong replacement wheels, wheel bolts, or wheel nuts can be dangerous. It could affect the braking and handling of the vehicle. Tires can lose air, and cause loss of control, causing a crash. Always use the correct wheel, wheel bolts, and wheel nuts for replacement.

Caution

The wrong wheel can also cause problems with bearing life, brake cooling, speedometer or odometer calibration, headlamp aim, rear differential, bumper height, vehicle ground clearance, and tire or tire chain clearance to the body and chassis.

See *If a Tire Goes Flat* ⇨ *281* for more information.

Used Replacement Wheels

⚠ Warning

Replacing a wheel with a used one is dangerous. How it has been used or how far it has been driven may be unknown. It could fail suddenly and cause a crash. When replacing wheels, use a new GM original equipment wheel.

Tire Chains

⚠ Warning

Do not use tire chains. There is not enough clearance. Tire chains used on a vehicle without the proper amount of clearance can cause damage to the brakes, suspension, or other vehicle parts. The area damaged by the tire chains could cause loss of control and a crash. Use another type of traction device only if its manufacturer recommends it for the vehicle's tire size combination and road conditions. Follow that manufacturer's instructions. To avoid vehicle damage, drive slowly and readjust or remove the traction device if it contacts the vehicle. Do not spin the wheels. If traction devices are used, install them on the rear tires.

If a Tire Goes Flat

If the vehicle has run-flat tires, there is no need to stop on the side of the road to change a flat tire. See *Run-Flat Tires* ⇨ *261*.

⚠ Warning

Special tools and procedures are required to service a run-flat tire. If these special tools and procedures are not used, injury or vehicle damage may occur. Always be sure the proper tools and procedures, as described in the service manual, are used.

It is unusual for a tire to blow out while driving, especially if the tires are maintained properly. See *Tires* ⇨ *259*. If air goes out of a tire, it is much more likely to leak out slowly. But if there is ever a blowout, here are a few tips about what to expect and what to do:

If a front tire fails, the flat tire creates a drag that pulls the vehicle toward that side. Take your foot off the accelerator pedal and grip the steering wheel firmly. Steer to maintain lane position, and then gently brake to a stop, well off the road, if possible.

A rear blowout, particularly on a curve, acts much like a skid and may require the same correction as used in a skid. Stop pressing the accelerator pedal and steer to straighten the vehicle. It may be very bumpy and noisy. Gently brake to a stop, well off the road, if possible.

⚠ Warning

Lifting a vehicle and getting under it to do maintenance or repairs is dangerous without the appropriate safety equipment and training. If a jack is provided with the vehicle, it is designed only for changing a flat tire. If it is used for anything else, you or others could be badly injured or killed if the

(Continued)

Warning (Continued)

vehicle slips off the jack. If a jack is provided with the vehicle, only use it for changing a flat tire.

If this vehicle does not have run-flat tires and a tire goes flat, avoid further tire and wheel damage by driving slowly to a level place, well off the road, if possible.

1. Turn on the hazard warning flashers. See *Hazard Warning Flashers* ⇨ *132*.
2. Set the parking brake firmly.
3. Put an automatic transmission in P (Park) or a manual transmission in 1 (First) or R (Reverse).
4. Turn off the ignition.
5. Inspect the flat tire.

⚠ Warning

Driving on a flat tire will cause permanent damage to the tire. Re-inflating a tire after it has been driven on while severely underinflated or flat may cause a blowout and a serious crash. Never attempt to re-inflate a tire that has been driven on while severely underinflated or flat. Have your dealer or an authorized tire service center repair or replace the flat tire as soon as possible.

If this vehicle has a tire sealant kit and the tire has been separated from the wheel, has damaged sidewalls, or has a puncture larger than 6 mm (0.25 in), the tire is too severely damaged for the tire sealant and compressor kit to be effective. If the tire has a puncture less than 6 mm (0.25 in) in the tread area of the tire, see *Tire Sealant and Compressor Kit* ⇨ *282*.

Tire Sealant and Compressor Kit

⚠ Warning

Idling a vehicle in an enclosed area with poor ventilation is dangerous. Engine exhaust may enter the vehicle. Engine exhaust contains carbon monoxide (CO) which cannot be seen or smelled. It can cause unconsciousness and even death. Never run the engine in an enclosed area that has no fresh air ventilation. For more information, see *Engine Exhaust* ⇨ *182*.

⚠ Warning

Overinflating a tire could cause the tire to rupture and you or others could be injured. Be sure to read and follow the tire sealant and compressor kit instructions

(Continued)

Warning (Continued)

and inflate the tire to its recommended pressure. Do not exceed the recommended pressure.

⚠ Warning

Storing the tire sealant and compressor kit or other equipment in the passenger compartment of the vehicle could cause injury. In a sudden stop or collision, loose equipment could strike someone. Store the tire sealant and compressor kit in its original location.

If this vehicle has a tire sealant and compressor kit, there may not be a spare tire or tire changing equipment, and on some vehicles there may not be a place to store a tire.

The tire sealant and compressor can be used to temporarily seal punctures up to 6 mm (0.25 in) in the tread area of the tire. It can also be used to inflate an underinflated tire.

If the tire has been separated from the wheel, has damaged sidewalls, or has a large puncture, the tire is too severely damaged for the tire sealant and compressor kit to be effective. See *Roadside Assistance Program* ⇨ *328*.

Read and follow all of the tire sealant and compressor kit instructions.

The kit includes:

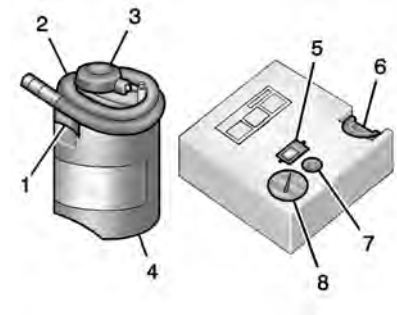

1. Sealant Canister Inlet Valve
2. Sealant/Air Hose
3. Base of Sealant Canister
4. Tire Sealant Canister
5. On/Off Button
6. Slot on Top of Compressor
7. Pressure Deflation Button
8. Pressure Gauge

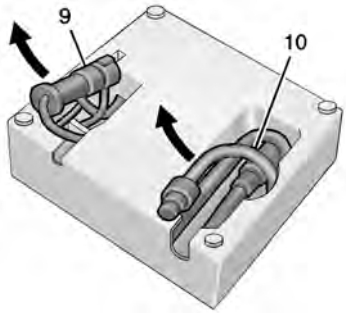

9. Power Plug
10. Air Only Hose

Tire Sealant

Read and follow the safe handling instructions on the label adhered to the tire sealant canister (4).

Check the tire sealant expiration date on the tire sealant canister. The tire sealant canister (4) should be replaced before its expiration date. Replacement tire sealant canisters are available at your local dealer.

There is only enough sealant to seal one tire. After usage, the tire sealant canister must be replaced.

Using the Tire Sealant and Compressor Kit to Temporarily Seal and Inflate a Punctured Tire

When using the tire sealant and compressor kit during cold temperatures, warm the kit in a heated environment for five minutes. This will help to inflate the tire faster.

If a tire goes flat, avoid further tire and wheel damage by driving slowly to a level place. Turn on the hazard warning flashers. See *Hazard Warning Flashers* ⇨ *132*.

See *If a Tire Goes Flat* ⇨ *281* for other important safety warnings.

Do not remove any objects that have penetrated the tire.

1. Remove the tire sealant canister (4) and compressor from its storage location. See *Storing the Tire Sealant and Compressor Kit* ⇨ *289*.
2. Remove the air only hose (10) and the power plug (9) from the bottom of the compressor.
3. Place the compressor on the ground near the flat tire.

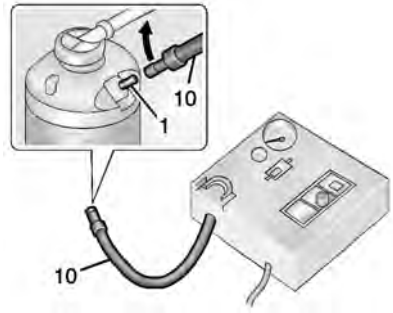

4. Attach the air only hose (10) to the sealant canister inlet valve (1) by turning it clockwise until tight.

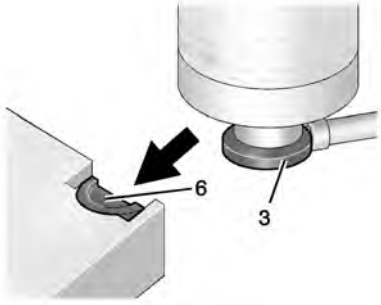

5. Slide the base of the tire sealant canister (3) into the slot on the top of the compressor (6) to hold it upright.

   Make sure the tire valve stem is positioned close to the ground so the hose will reach it.

6. Remove the valve stem cap from the flat tire by turning it counterclockwise.

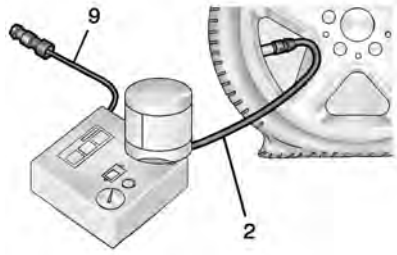

7. Attach the sealant/air hose (2) to the tire valve stem by turning it clockwise until tight.

8. Plug the power plug (9) into the accessory power outlet in the vehicle. Unplug all items from other accessory power outlets. See *Power Outlets* ⇨ *94*.

   If the vehicle has an accessory power outlet, do not use the cigarette lighter.

   If the vehicle only has a cigarette lighter, use the cigarette lighter.

   Do not pinch the power plug cord in the door or window.

9. Start the vehicle. The vehicle must be running while using the air compressor.

10. Press the on/off button (5) to turn the tire sealant and compressor kit on.

    The compressor will inject sealant and air into the tire.

    The pressure gauge (8) will initially show a high pressure while the compressor pushes the sealant into the tire. Once the sealant is completely dispersed into the tire, the pressure will quickly drop and start to rise again as the tire inflates with air only.

11. Inflate the tire to the recommended inflation pressure using the pressure gauge (8). The recommended inflation pressure can be found on the Tire and Loading Information label. See *Tire Pressure* ⇨ *267*.

    The pressure gauge (8) may read higher than the actual tire pressure while the compressor

is on. Turn the compressor off to get an accurate pressure reading. The compressor may be turned on/off until the correct pressure is reached.

Caution

If the recommended pressure cannot be reached after approximately 25 minutes, the vehicle should not be driven farther. The tire is too severely damaged and the tire sealant and compressor kit cannot inflate the tire. Remove the power plug from the accessory power outlet and unscrew the inflating hose from the tire valve. See *Roadside Assistance Program* ⇨ *328*.

12. Press the on/off button (5) to turn the tire sealant and compressor kit off.

    The tire is not sealed and will continue to leak air until the vehicle is driven and the sealant is distributed in the tire. Therefore, Steps 13–21 must be done immediately after Step 12.

    Be careful while handling the tire sealant and compressor kit as it could be warm after usage.

13. Unplug the power plug (9) from the accessory power outlet in the vehicle.
14. Turn the sealant/air hose (2) counterclockwise to remove it from the tire valve stem.
15. Replace the tire valve stem cap.
16. Remove the tire sealant canister (4) from the slot on top of the compressor (6).
17. Turn the air only hose (10) counterclockwise to remove it from the tire sealant canister inlet valve (1).
18. Turn the sealant/air hose (2) clockwise onto the sealant canister inlet valve (1) to prevent sealant leakage.
19. Return the air only hose (10) and power plug (9) back to their original storage location.

20. If the flat tire was able to inflate to the recommended inflation pressure, remove the maximum speed label from the sealant canister and place it in a highly visible location.

    Do not exceed the speed on this label until the damaged tire is repaired or replaced.

21. Return the equipment to its original storage location in the vehicle.
22. Immediately drive the vehicle 8 km (5 mi) to distribute the sealant in the tire.
23. Stop at a safe location and check the tire pressure. Refer to Steps 1–10 under “Using the

Tire Sealant and Compressor Kit without Sealant to Inflate a Tire (Not Punctured)."

If the tire pressure has fallen more than 68 kPa (10 psi) below the recommended inflation pressure, stop driving the vehicle. The tire is too severely damaged and the tire sealant cannot seal the tire. See *Roadside Assistance Program* ⇨ *328*.

If the tire pressure has not dropped more than 68 kPa (10 psi) from the recommended inflation pressure, inflate the tire to the recommended inflation pressure.

24. Wipe off any sealant from the wheel, tire, or vehicle.
25. Dispose of the used tire sealant canister (4) at a local dealer or in accordance with local state codes and practices.
26. Replace it with a new canister available from your dealer.
27. After temporarily sealing a tire using the tire sealant and compressor kit, take the vehicle to an authorized dealer within 161 km (100 mi) of driving to have the tire repaired or replaced.

Using the Tire Sealant and Compressor Kit without Sealant to Inflate a Tire (Not Punctured)

The kit includes:

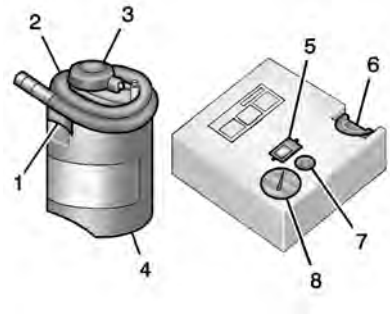

1. Sealant Canister Inlet Valve
2. Sealant/Air Hose
3. Base of Sealant Canister
4. Tire Sealant Canister
5. On/Off Button
6. Slot on Top of Compressor
7. Pressure Deflation Button
8. Pressure Gauge

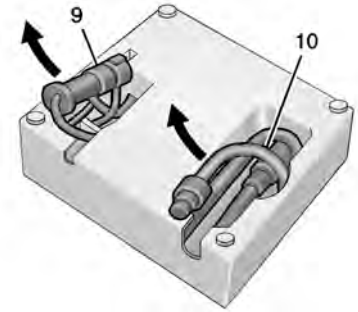

9. Power Plug
10. Air Only Hose

If a tire goes flat, avoid further tire and wheel damage by driving slowly to a level place. Turn on the hazard warning flashers. See *Hazard Warning Flashers* ⇨ *132*.

See *If a Tire Goes Flat* ⇨ *281* for other important safety warnings.

1. Remove the compressor from its storage location. See *Storing the Tire Sealant and Compressor Kit* ⇨ *289*.
2. Remove the air only hose (10) and the power plug (9) from the bottom of the compressor.
3. Place the compressor on the ground near the flat tire.

   Make sure the tire valve stem is positioned close to the ground so the hose will reach it.
4. Remove the valve stem cap from the flat tire by turning it counterclockwise.
5. Attach the air only hose (10) to the tire valve stem by turning it clockwise until tight.
6. Plug the power plug (9) into the accessory power outlet in the vehicle. Unplug all items from other accessory power outlets. See *Power Outlets* ⇨ *94*.

   If the vehicle has an accessory power outlet, do not use the cigarette lighter.

   If the vehicle only has a cigarette lighter, use the cigarette lighter.

   Do not pinch the power plug cord in the door or window.
7. Start the vehicle. The vehicle must be running while using the air compressor.
8. Press the on/off button (5) to turn the tire sealant and compressor kit on.

   The compressor will inflate the tire with air only.
9. Inflate the tire to the recommended inflation pressure using the pressure gauge (8). The recommended inflation pressure can be found on the Tire and Loading Information label. See *Tire Pressure* ⇨ *267*.

   The pressure gauge (8) may read higher than the actual tire pressure while the compressor is on. Turn the compressor off to get an accurate pressure reading. The compressor may be turned on/off until the correct pressure is reached.

Caution

If the recommended pressure cannot be reached after approximately 25 minutes, the vehicle should not be driven farther. The tire is too severely damaged and the tire sealant and compressor kit cannot inflate the tire. Remove the power plug from the accessory power outlet and unscrew the inflating hose from the tire valve. See *Roadside Assistance Program* ⇨ *328*.

10. Press the on/off button (5) to turn the tire sealant and compressor kit off.

    Be careful while handling the compressor as it could be warm after usage.
11. Unplug the power plug (9) from the accessory power outlet in the vehicle.

12. Turn the air only hose (10) counterclockwise to remove it from the tire valve stem.
13. Replace the tire valve stem cap.
14. Return the air only hose (10) and power plug (9) back to their original storage location.
15. Return the equipment to its original storage location in the vehicle.

The tire sealant and compressor kit has accessory adapters located in a compartment on the bottom of its housing that can be used to inflate air mattresses, balls, etc.

Storing the Tire Sealant and Compressor Kit

The tire sealant and compressor kit is in a bag in the trunk.

1. Open the trunk. See *Trunk* ⇨ *22*.
2. Remove the load floor.

3. Remove the tire sealant and compressor kit bag from the storage foam.
4. Remove the tire sealant and compressor kit from the bag.

To store the tire sealant and compressor kit, reverse the steps.

Jump Starting

Jump Starting - North America

For more information about the vehicle battery, see *Battery - North America* ⇨ *246*.

If the battery has run down, try to use another vehicle and some jumper cables to start your vehicle. Be sure to use the following steps to do it safely.

⚠ Warning

WARNING: Battery posts, terminals, and related accessories contain lead and lead compounds, chemicals known to the State of California to cause cancer and birth defects or other reproductive harm. Batteries also contain other chemicals known to the State of California to cause cancer. **WASH HANDS AFTER**

(Continued)

Warning (Continued)

HANDLING. For more information go to www.P65Warnings.ca.gov/passenger-vehicle.

See *California Proposition 65 Warning* ⇨ *220* and the back cover.

⚠ Warning

Batteries can hurt you. They can be dangerous because:

- They contain acid that can burn you.
- They contain gas that can explode or ignite.
- They contain enough electricity to burn you.

If you do not follow these steps exactly, some or all of these things can hurt you.

Caution

Ignoring these steps could result in costly damage to the vehicle that would not be covered by the vehicle warranty. Trying to start the vehicle by pushing or pulling it will not work, and it could damage the vehicle.

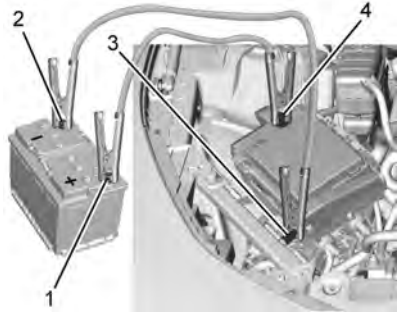

1. Good Battery Positive Post
2. Good Battery Negative Post
3. Discharged Battery Negative Grounding Point
4. Discharged Battery Positive Post

The jump start positive post (1) and negative post (2) are on the battery of the vehicle providing the jump start.

The jump start positive post (4) and the negative grounding point (3) for the discharged battery are on the passenger side of the vehicle.

The positive jump start connection for the discharged battery is under a red cover. Remove the cover to expose the terminal.

1. Check the other vehicle. It must have a 12-volt battery with a negative ground system.

Caution

If the other vehicle does not have a 12-volt system with a negative ground, both vehicles can be damaged. Only use a vehicle that has a 12-volt system with a negative ground for jump starting.

2. Position the two vehicles so that they are not touching.
3. Set the parking brake firmly and put the shift lever in P (Park) with an automatic transmission, or Neutral with a manual transmission. See *Shifting Into Park* ⇨ *180* with an automatic transmission, or *Parking (Manual Transmission)* ⇨ *181* with a manual transmission.

Caution

If any accessories are left on or plugged in during the jump starting procedure, they could be damaged. The repairs would not be covered by the vehicle warranty. Whenever possible, turn off or unplug all accessories on either vehicle when jump starting.

4. Turn the ignition off. Turn off all lights and accessories in both vehicles, except the hazard warning flashers if needed.

⚠ Warning

An electric fan can start up even when the engine is not running and can injure you. Keep hands, clothing, and tools away from any underhood electric fan.

⚠ Warning

Using a match near a battery can cause battery gas to explode. People have been hurt doing this, and some have been blinded. Use a flashlight if you need more light.

Battery fluid contains acid that can burn you. Do not get it on you. If you accidentally get it in your eyes or on your skin, flush the place with water and get medical help immediately.

⚠ Warning

Fans or other moving engine parts can injure you badly. Keep your hands away from moving parts once the engine is running.

5. Connect one end of the red positive (+) cable to the underhood remote positive (+) terminal on the discharged battery.
6. Connect the other end of the red positive (+) cable to the positive (+) terminal of the good battery.
7. Connect one end of the black negative (–) cable to the negative (–) terminal of the good battery.
8. Connect the other end of the black negative (–) cable to the underhood negative (–) grounding point for the discharged battery.

9. Start the engine in the vehicle with the good battery and run the engine at idle speed for at least four minutes.
10. Try to start the vehicle that had the dead battery. If it will not start after a few tries, it probably needs service.

Caution

If the jumper cables are connected or removed in the wrong order, electrical shorting may occur and damage the vehicle. The repairs would not be covered by the vehicle warranty. Always connect and remove the jumper cables in the correct order, making sure that the cables do not touch each other or other metal.

Jumper Cable Removal

Reverse the sequence exactly when removing the jumper cables.

After starting the disabled vehicle and removing the jumper cables, allow it to idle for several minutes.

Towing the Vehicle

Caution

Incorrectly towing a disabled vehicle may cause damage. The damage would not be covered by the vehicle warranty. Do not lash or hook to suspension components. Use the proper straps around the tires to secure the vehicle. Do not drag a locked wheel/tire. Use tire skates or dollies under any locked wheel/tire while loading the vehicle. Do not use a sling type lift to tow the vehicle. This could damage the vehicle.

Caution

If the vehicle cannot be shifted into Neutral (N), do not use the tow eye to tow the vehicle. Vehicle damage may occur.

GM recommends a flatbed tow truck to transport a disabled vehicle. Use ramps to help reduce approach angles, if necessary. A towed vehicle should have its drive wheels off the ground. Contact Roadside Assistance or a professional towing service if the disabled vehicle must be towed.

For Camaro High Performance models, see the Camaro High Performance supplement.

To tow the vehicle behind another vehicle for recreational purposes, such as behind a motor home, see *Recreational Vehicle Towing* ⇨ *294*.

Front Attachment Points (L4 and V6 Models)

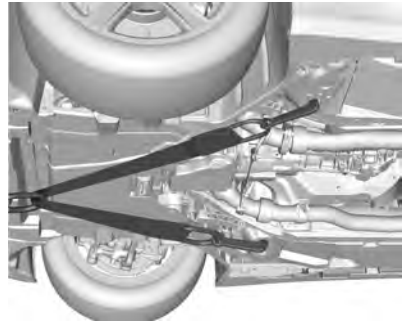

The vehicle is equipped with specific attachment points to be used by the towing provider. These holes may be used to pull the vehicle from a flat road surface onto the flatbed tow truck.

Tow Eye Hook (V8 Models)

Removal and Installation – Tow Hook Covers

The vehicle is equipped with a tow eye that can be used to pull the vehicle onto a flatbed car carrier from a flat road surface. Do not use the tow eye to pull the vehicle from snow, mud, or sand.

The tow eye is located underneath the load floor, near the tire sealant and compressor kit, if equipped.

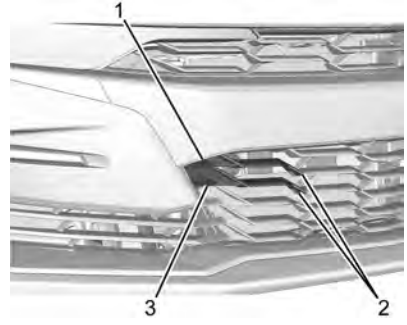

1. Release Slot
2. Right Side Tabs
3. Lower Tab

To remove the tow hook covers:

1. Place a plastic tool in the slot (1) and pry the cover loose. Use care to not scratch the cover or grille.

2. Pull the cover away from the grille and unhook the lower tab (3) and right side tabs (2).

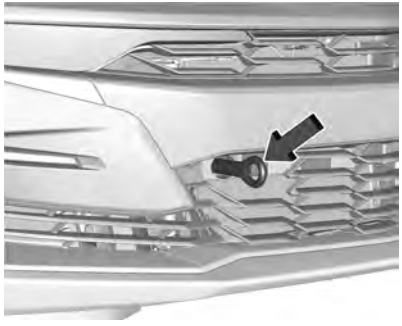

3. Install the tow eye into the socket by turning it until it stops.

To install the tow hook covers:

1. Remove the tow eye.
2. Align the cover using the right side tabs (2).
3. Push the cover toward the grille. Align the lower tab (3) to the grille.
4. Push the area around the slot (1) to secure the cover.

Recreational Vehicle Towing

Caution
Dolly towing or dinghy towing the vehicle may cause damage because of reduced ground clearance. Always put the vehicle on a flatbed truck or trailer.

The vehicle was neither designed nor intended to be towed with any of its wheels on the ground. If the vehicle must be towed, see *Towing the Vehicle* ⇨ *292*.

Appearance Care

Exterior Care

Locks

Locks are lubricated at the factory. Use a de-icing agent only when absolutely necessary, and have the locks greased after using. See *Recommended Fluids and Lubricants* ⇨ *315*.

Washing the Vehicle

For the Camaro High Performance vehicle, see the Camaro High performance supplement.

To preserve the vehicle's finish, wash it often and out of direct sunlight.

Caution
Do not use petroleum-based, acidic, or abrasive cleaning agents as they can damage the vehicle's paint, metal, or plastic parts. If damage occurs, it would
(Continued)

Caution (Continued)

not be covered by the vehicle warranty. Approved cleaning products can be obtained from your dealer. Follow all manufacturer directions regarding correct product usage, necessary safety precautions, and appropriate disposal of any vehicle care product.

Caution

Avoid using high-pressure washes closer than 30 cm (12 in) to the surface of the vehicle. Use of power washers exceeding 8 274 kPa (1,200 psi) can result in damage or removal of paint and decals.

Caution

Do not power wash any component under the hood that has this symbol.

This could cause damage that would not be covered by the vehicle warranty.

Caution

Some automatic car washes can cause damage to the vehicle, wheels and ground effects. Automatic car washes are not recommended, due to lack of clearance for the undercarriage and/or wide rear tires and wheels.

If using an automatic car wash, comply with the car wash instructions. The windshield wiper and rear window wiper, if equipped, must be off. Remove any accessories that may be damaged or interfere with the car wash equipment.

Rinse the vehicle well, before washing and after, to remove all cleaning agents completely. If they are allowed to dry on the surface, they could stain.

Dry the finish with a soft, clean chamois or an all-cotton towel to avoid surface scratches and water spotting.

Finish Care

Application of aftermarket clearcoat sealant/wax materials is not recommended. If painted surfaces are damaged, see your dealer to have the damage assessed and repaired. Foreign materials such as calcium chloride and other salts, ice melting agents, road oil and tar, tree sap, bird droppings, chemicals from industrial chimneys, etc., can damage the vehicle's finish if they remain on painted surfaces. Wash the vehicle as soon as possible. If necessary, use non-abrasive

cleaners that are marked safe for painted surfaces to remove foreign matter.

Occasional hand waxing or mild polishing should be done to remove residue from the paint finish. See your dealer for approved cleaning products.

Do not apply waxes or polishes to uncoated plastic, vinyl, rubber, decals, simulated wood, or flat paint as damage can occur.

Caution

Machine compounding or aggressive polishing on a basecoat/clearcoat paint finish may damage it. Use only non-abrasive waxes and polishes that are made for a basecoat/clearcoat paint finish on the vehicle.

To keep the paint finish looking new, keep the vehicle garaged or covered whenever possible.

Protecting Exterior Bright Metal Moldings

Caution

Failure to clean and protect the bright metal moldings can result in a hazy white finish or pitting. This damage would not be covered by the vehicle warranty.

The bright metal moldings on the vehicle are aluminum, chrome or stainless steel. To prevent damage always follow these cleaning instructions:

- Be sure the molding is cool to the touch before applying any cleaning solution.
- Use only approved cleaning solutions for aluminum, chrome, or stainless steel. Some cleaners are highly acidic or contain alkaline substances and can damage the moldings.
- Always dilute a concentrated cleaner according to the manufacturer's instructions.
- Do not use cleaners that are not intended for automotive use.
- Use a nonabrasive wax on the vehicle after washing to protect and extend the molding finish.

Convertible Top Care

Frequently hand wash convertible tops with mild car wash soap. Never use a stiff brush, steam, bleach, or aggressive cleaners.
If necessary, a soft brush can be used to remove dirt. When finished cleaning, thoroughly rinse the fabric. Avoid automatic car washes with overhead brushes or very high pressure sprays as they can cause damage and leaking.

Only lower the top when it is completely dry and avoid leaving the top lowered for extended periods of time to prevent excessive interior weathering.

Avoid leaving large amounts of snow on the top for extended periods of time as damage may also occur.

Hood Extractor

Hood Air Extractor

For the Camaro High Performance vehicle, see the Camaro High performance supplement.

It is not recommended that the air extractor on the SS Performance Package be waxed, as it will change the gloss level of the surface. In addition, care must be used when waxing around the air extractor. If a small amount of wax is applied to the extractor it can create an irregular appearance in the surface of the panel.

The air extractor may have vent screens in the openings. Keep leaves or other debris out of the vent screens.

Caution
Pushing on the vent screens could damage them. Do not push on the screens when clearing.

There is a water deflector on the underside of the air extractor. Do not remove it.

Cleaning Exterior Lamps/ Lenses, Emblems, Decals, and Stripes

Use only lukewarm or cold water, a soft cloth, and a car washing soap to clean exterior lamps, lenses, emblems, decals, and stripes. Follow instructions under "Washing the Vehicle" previously in this section.

Lamp covers are made of plastic, and some have a UV protective coating. Do not clean or wipe them when dry.

Do not use any of the following on lamp covers:

- Abrasive or caustic agents.
- Washer fluids and other cleaning agents in higher concentrations than suggested by the manufacturer.
- Solvents, alcohols, fuels, or other harsh cleaners.
- Ice scrapers or other hard items.
- Aftermarket appearance caps or covers while the lamps are illuminated, due to excessive heat generated.

Caution
Failure to clean lamps properly can cause damage to the lamp cover that would not be covered by the vehicle warranty.

Caution

Using wax on low gloss black finish stripes can increase the gloss level and create a non-uniform finish. Clean low gloss stripes with soap and water only.

Air Intakes

Clear debris from the air intakes, between the hood and windshield, when washing the vehicle.

Windshield and Wiper Blades

Clean the outside of the windshield with glass cleaner.

Clean rubber blades using lint-free cloth or paper towel soaked with windshield washer fluid or a mild detergent. Wash the windshield thoroughly when cleaning the blades. Bugs, road grime, sap, and a buildup of vehicle wash/wax treatments may cause wiper streaking.

Replace the wiper blades if they are worn or damaged. Damage can be caused by extreme dusty conditions, sand, salt, heat, sun, snow, and ice.

Weatherstrips

Apply weatherstrip lubricant on weatherstrips to make them last longer, seal better, and not stick or squeak. Lubricate weatherstrips at least once a year. Hot, dry climates may require more frequent application. Black marks from rubber material on painted surfaces can be removed by rubbing with a clean cloth. See *Recommended Fluids and Lubricants* ⇨ *315*.

Tires

Use a stiff brush with tire cleaner to clean the tires.

Caution

Using petroleum-based tire dressing products on the vehicle may damage the paint finish and/

(Continued)

Caution (Continued)

or tires. When applying a tire dressing, always wipe off any overspray from all painted surfaces on the vehicle.

Wheels and Wheel Trim

Use a soft, clean cloth with mild soap and water to clean the wheels. After rinsing thoroughly with clean water, dry with a soft, clean towel. A wax may then be applied.

Caution

Chrome wheels and chrome wheel trim may be damaged if the vehicle is not washed after driving on roads that have been sprayed with magnesium chloride or calcium chloride. These are used on roads for conditions such as dust and ice. Always wash the chrome with soap and water after exposure.

Caution

To avoid surface damage on wheels and wheel trim, do not use strong soaps, chemicals, abrasive polishes, cleaners, or brushes. Use only GM approved cleaners. Do not drive the vehicle through an automatic car wash that uses silicon carbide tire/wheel cleaning brushes. Damage could occur and the repairs would not be covered by the vehicle warranty.

Brake System

Visually inspect brake lines and hoses for proper hook-up, binding, leaks, cracks, chafing, etc. Inspect disc brake pads for wear and rotors for surface condition. Inspect drum brake linings/shoes for wear or cracks. Inspect all other brake parts.

Steering, Suspension, and Chassis Components

Visually inspect steering, suspension, and chassis components for damaged, loose, or missing parts or signs of wear at least once a year.

Inspect power steering for proper attachment, connections, binding, leaks, cracks, chafing, etc.

Visually check constant velocity joint boots and axle seals for leaks.

Body Component Lubrication

Lubricate all key lock cylinders, hood hinges, liftgate hinges, and steel fuel door hinge unless the components are plastic. Applying silicone grease on weatherstrips with a clean cloth will make them last longer, seal better, and not stick or squeak.

Underbody Maintenance

At least twice a year, spring and fall, use plain water to flush any corrosive materials from the underbody. Take care to thoroughly clean any areas where mud and other debris can collect.

Do not directly power wash the rear axle output seals. High pressure water can overcome the seals and contaminate the rear axle fluid. Contaminated fluid will decrease the life of the axle and should be replaced.

Sheet Metal Damage

If the vehicle is damaged and requires sheet metal repair or replacement, make sure the body repair shop applies anti-corrosion material to parts repaired or replaced to restore corrosion protection.

Original manufacturer replacement parts will provide the corrosion protection while maintaining the vehicle warranty.

Finish Damage

Quickly repair minor chips and scratches with touch-up materials available from your dealer to avoid

corrosion. Larger areas of finish damage can be corrected in your dealer's body and paint shop.

Chemical Paint Spotting

Airborne pollutants can fall upon and attack painted vehicle surfaces causing blotchy, ring-shaped discolorations, and small, irregular dark spots etched into the paint surface. See “Finish Care” previously in this section.

Interior Care

To prevent dirt particle abrasions, regularly clean the vehicle's interior. Immediately remove any soils. Newspapers or dark garments can transfer color to the vehicle’s interior.

Use a soft bristle brush to remove dust from knobs and crevices on the instrument cluster. Using a mild soap solution, immediately remove hand lotions, sunscreen, and insect repellent from all interior surfaces or permanent damage may result.

Use cleaners specifically designed for the surfaces being cleaned to prevent permanent damage. Apply all cleaners directly to the cleaning cloth. Do not spray cleaners on any switches or controls. Remove cleaners quickly.

Before using cleaners, read and follow all safety instructions on the label. While cleaning the interior, open the doors and windows to get proper ventilation.

To prevent damage, do not clean the interior using the following cleaners or techniques:

- Never use a razor or any other sharp object to remove soil from any interior surface.
- Never use a brush with stiff bristles.
- Never rub any surface aggressively or with too much pressure.
- Do not use laundry detergents or dishwashing soaps with degreasers. For liquid cleaners, use approximately 20 drops per 3.8 L (1 gal) of water.
  A concentrated soap solution will create streaks and attract dirt. Do not use solutions that contain strong or caustic soap.
- Do not heavily saturate the upholstery when cleaning.
- Do not use solvents or cleaners containing solvents.

Interior Glass

To clean, use a terry cloth fabric dampened with water. Wipe droplets left behind with a clean dry cloth. If necessary, use a commercial glass cleaner after cleaning with plain water.

Caution
To prevent scratching, never use abrasive cleaners on automotive glass. Abrasive cleaners or aggressive cleaning may damage the rear window defogger.

Cleaning the windshield with water during the first three to six months of ownership will reduce tendency to fog.

Speaker Covers

Vacuum around a speaker cover gently, so that the speaker will not be damaged. Clean spots with water and mild soap.

Coated Moldings

Coated moldings should be cleaned.

- When lightly soiled, wipe with a sponge or soft, lint-free cloth dampened with water.
- When heavily soiled, use warm soapy water.

Fabric/Carpet/Suede

Start by vacuuming the surface using a soft brush attachment. If a rotating vacuum brush attachment is being used, only use it on the floor carpet. Before cleaning, gently remove as much of the soil as possible:

- Gently blot liquids with a paper towel. Continue blotting until no more soil can be removed.
- For solid soils, remove as much as possible prior to vacuuming.

To clean:

1. Saturate a clean, lint-free colorfast cloth with water. Microfiber cloth is recommended to prevent lint transfer to the fabric or carpet.
2. Remove excess moisture by gently wringing until water does not drip from the cleaning cloth.
3. Start on the outside edge of the soil and gently rub toward the center. Fold the cleaning cloth to a clean area frequently to prevent forcing the soil in to the fabric.
4. Continue gently rubbing the soiled area until there is no longer any color transfer from the soil to the cleaning cloth.
5. If the soil is not completely removed, use a mild soap solution followed only by plain water.

If the soil is not completely removed, it may be necessary to use a commercial upholstery cleaner or spot lifter. Test a small hidden area for colorfastness before using a commercial upholstery cleaner or spot lifter. If ring formation occurs, clean the entire fabric or carpet.

After cleaning, use a paper towel to blot excess moisture.

Cleaning High Gloss Surfaces and Vehicle Information and Radio Displays

Use a microfiber cloth on high gloss surfaces or vehicle displays. First, use a soft bristle brush to remove dirt that can scratch the surface. Then gently clean by rubbing with a microfiber cloth. Never use window cleaners or solvents. Periodically hand wash the microfiber cloth separately, using mild soap. Do not

use bleach or fabric softener. Rinse thoroughly and air dry before next use.

Caution

Do not attach a device with a suction cup to the display. This may cause damage and would not be covered by the vehicle warranty.

Instrument Panel, Leather, Vinyl, Other Plastic Surfaces, Low Gloss Paint Surfaces, and Natural Open Pore Wood Surfaces

Use a soft microfiber cloth dampened with water to remove dust and loose dirt. For a more thorough cleaning, use a soft microfiber cloth dampened with a mild soap solution.

Caution

Soaking or saturating leather, especially perforated leather, as well as other interior surfaces, may cause permanent damage. Wipe excess moisture from these surfaces after cleaning and allow them to dry naturally. Never use heat, steam, or spot removers. Do not use cleaners that contain silicone or wax-based products. Cleaners containing these solvents can permanently change the appearance and feel of leather or soft trim, and are not recommended.

Do not use cleaners that increase gloss, especially on the instrument panel. Reflected glare can decrease visibility through the windshield under certain conditions.

Caution

Use of air fresheners may cause permanent damage to plastics and painted surfaces. If an air freshener comes in contact with any plastic or painted surface in the vehicle, blot immediately and clean with a soft cloth dampened with a mild soap solution. Damage caused by air fresheners would not be covered by the vehicle warranty.

Cargo Cover and Convenience Net

If equipped, wash with warm water and mild detergent. Do not use chlorine bleach. Rinse with cold water, and then dry completely.

Care of Seat Belts

Keep belts clean and dry.

⚠ Warning

Do not bleach or dye seat belt webbing. It may severely weaken the webbing. In a crash, they might not be able to provide adequate protection. Clean and rinse seat belt webbing only with mild soap and lukewarm water. Allow the webbing to dry.

Floor Mats

⚠ Warning

If a floor mat is the wrong size or is not properly installed, it can interfere with the pedals. Interference with the pedals can cause unintended acceleration and/or increased stopping distance which can cause a crash and injury. Make sure the floor mat does not interfere with the pedals.

Use the following guidelines for proper floor mat usage.

- The original equipment floor mats were designed for your vehicle. If the floor mats need replacing, it is recommended that GM certified floor mats be purchased. Non-GM floor mats may not fit properly and may interfere with the pedals. Always check that the floor mats do not interfere with the pedals.
- Do not use a floor mat if the vehicle is not equipped with a floor mat retainer on the driver side floor.
- Use the floor mat with the correct side up. Do not turn it over.
- Do not place anything on top of the driver side floor mat.
- Use only a single floor mat on the driver side.
- Do not place one floor mat on top of another.

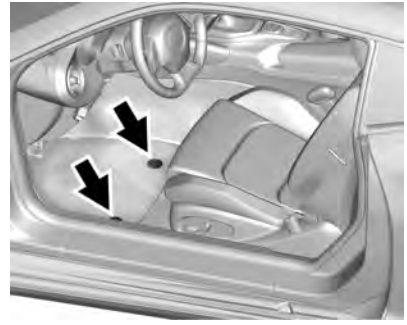

The driver side floor mat is held in place by two hook-type retainers.

Removing and Replacing the Driver Side Floor Mat

1. Pull up on the rear of the mat to remove it from the hooks.
2. Reinstall by lining up the floor mat retainer openings over the carpet retainers and hook into position.
3. Make sure the floor mat is properly secured in place. Verify the floor mat does not interfere with the pedals.

Service and Maintenance

General Information
General Information 304

Maintenance Schedule
Maintenance Schedule 306

Special Application Services
Special Application Services 312

Additional Maintenance and Care
Additional Maintenance and Care 312

Recommended Fluids, Lubricants, and Parts
Recommended Fluids and Lubricants 315
Maintenance Replacement Parts 317

Maintenance Records
Maintenance Records 318

General Information

Your vehicle is an important investment. This section describes the required maintenance for the vehicle. Follow this schedule to help protect against major repair expenses resulting from neglect or inadequate maintenance. It may also help to maintain the value of the vehicle if it is sold. It is the responsibility of the owner to have all required maintenance performed.

Your dealer has trained technicians who can perform required maintenance using genuine replacement parts. They have up-to-date tools and equipment for fast and accurate diagnostics. Many dealers have extended evening and Saturday hours, courtesy transportation, and online scheduling to assist with service needs.

Your dealer recognizes the importance of providing competitively priced maintenance and repair services. With trained technicians, the dealer is the place for routine maintenance such as oil changes and tire rotations and additional maintenance items like tires, brakes, batteries, and wiper blades.

Caution

Damage caused by improper maintenance can lead to costly repairs and may not be covered by the vehicle warranty. Maintenance intervals, checks, inspections, recommended fluids, and lubricants are important to keep the vehicle in good working condition.

Do not have chemical flushes that are not approved by GM performed on the vehicle. The use of flushes, solvents, cleaners, or lubricants that are not approved by GM could damage the vehicle, requiring expensive repairs that are not covered by the vehicle warranty.

The Tire Rotation and Required Services are the responsibility of the vehicle owner. It is recommended to have your dealer perform these services every 12 000 km/7,500 mi. Proper vehicle maintenance helps to keep the vehicle in good working condition, improves fuel economy, and reduces vehicle emissions.

Because of the way people use vehicles, maintenance needs vary. There may need to be more frequent checks and services. The Additional Required Services - Normal are for vehicles that:

- Carry passengers and cargo within recommended limits on the Tire and Loading Information label. See *Vehicle Load Limits* ⇨ *170*.
- Are driven on reasonable road surfaces within legal driving limits.
- Use the recommended fuel. See *Recommended Fuel (3.6L V6 Engine)* ⇨ *213* or *Recommended Fuel (2.0L L4 Turbo Engine and 6.2L V8 Engine)* ⇨ *213* or *Recommended Fuel (6.2L V8 Supercharged Engine)* ⇨ *214*.

Refer to the information in the Maintenance Schedule Additional Required Services - Normal chart.

The Additional Required Services - Severe are for vehicles that are:

- Mainly driven in heavy city traffic in hot weather.
- Mainly driven in hilly or mountainous terrain.
- Frequently towing a trailer.
- Used for high speed or competitive driving.
- Used for taxi, police, or delivery service.

Refer to the information in the Maintenance Schedule Additional Required Services - Severe chart.

⚠ Warning

Performing maintenance work can be dangerous and can cause serious injury. Perform maintenance work only if the required information, proper tools, and equipment are available.
If they are not, see your dealer to have a trained technician do the work. See *Doing Your Own Service Work* ⇨ *221*.

Maintenance Schedule

Owner Checks and Services

At Each Fuel Stop

- Check the engine oil level. See *Engine Oil* ⇨ *229*.

Once a Month

- Check the tire inflation pressures. See *Tire Pressure* ⇨ *267*.
- Inspect the tires for wear. See *Tire Inspection* ⇨ *274*.
- Check the windshield washer fluid level. See *Washer Fluid* ⇨ *243*.

Engine Oil Change

When the CHANGE ENGINE OIL SOON message displays, have the engine oil and filter changed within the next 1 000 km/600 mi. If driven under the best conditions, the engine oil life system may not indicate the need for vehicle service for up to a year. The engine oil and filter must be changed at least once a year and the oil life system must be reset. Your trained dealer technician can perform this work. If the engine oil life system is reset accidentally, service the vehicle within 5 000 km/3,000 mi since the last service. Reset the oil life system when the oil is changed. See *Engine Oil Life System* ⇨ *232*.

Engine Air Filter Change

When the REPLACE AT NEXT OIL CHANGE message displays, the engine air filter should be replaced at the next engine oil change. When the REPLACE ENGINE AIR FILTER SOON message displays, the engine air filter should be replaced at the earliest convenience. Reset the engine air filter life system after the engine air filter is replaced. See *Engine Air Filter Life System (2.0L LTG and 3.6L LGX Engines Only)* ⇨ *234*.

Air Conditioning Desiccant (Replace Every Seven Years)

The air conditioning system requires maintenance every seven years. This service requires replacement of the desiccant to help the longevity and efficient operation of the air conditioning system. This service can be complex. See your dealer.

Tire Rotation and Required Services Every 12 000 km/ 7,500 mi

Rotate the tires, if recommended for the vehicle, and perform the following services. See *Tire Rotation* ⇨ *274*.

- Check engine oil level and oil life percentage. If needed, change engine oil and filter, and reset oil life system. See *Engine Oil* ⇨ *229* and *Engine Oil Life System* ⇨ *232*.
- If equipped with the engine air filter life system, check the air filter life percentage.
  If necessary, replace the engine air filter and reset the engine air

filter life system. See *Engine Air Filter Life System (2.0L LTG and 3.6L LGX Engines Only)* ⇨ *234*. If the vehicle is not equipped with the engine air filter life system, inspect the engine air cleaner filter. See *Engine Air Cleaner/Filter* ⇨ *235*.

- Check engine coolant level. See *Cooling System* ⇨ *237*.
- Check windshield washer fluid level. See *Washer Fluid* ⇨ *243*.
- Check tire inflation pressures. See *Tire Pressure* ⇨ *267*.
- Inspect tire wear. See *Tire Inspection* ⇨ *274*.
- Visually check for fluid leaks.
- Inspect brake system. See *Exterior Care* ⇨ *294*.
- Visually inspect steering, suspension, and chassis components for damage, including cracks or tears in the rubber boots, loose or missing parts, or signs of wear at least once a year. See *Exterior Care* ⇨ *294*.
- Inspect power steering for proper attachment, connections, binding, leaks, cracks, chafing, etc.
- Visually inspect halfshafts and drive shafts for excessive wear, lubricant leaks, and/or damage including: tube dents or cracks, constant velocity joint or universal joint looseness, cracked or missing boots, loose or missing boot clamps, center bearing excessive looseness, loose or missing fasteners, and axle seal leaks.
- Check restraint system components. See *Safety System Check* ⇨ *56*.
- Visually inspect fuel system for damage or leaks.
- Visually inspect exhaust system and nearby heat shields for loose or damaged parts.
- Lubricate body components. See *Exterior Care* ⇨ *294*.
- Check starter switch. See *Starter Switch Check* ⇨ *247*.
- Check automatic transmission shift lock control function. See *Automatic Transmission Shift Lock Control Function Check* ⇨ *247*.
- Check parking brake and automatic transmission park mechanism. See *Park Brake and P (Park) Mechanism Check* ⇨ *247*.
- Check accelerator pedal for damage, high effort, or binding. Replace if needed.
- Visually inspect gas strut for signs of wear, cracks, or other damage. Check the hold open ability of the strut. If the hold open is low, service the gas strut. See *Gas Strut(s)* ⇨ *249*.
- Check tire sealant expiration date, if equipped. See *Tire Sealant and Compressor Kit* ⇨ *282*.
- Inspect sunroof track and seal, if equipped. See *Sunroof* ⇨ *34*.

Maintenance Schedule Additional Required Services - Normal	12 000 km/7,500 mi	24 000 km/15,000 mi	36 000 km/22,500 mi	48 000 km/30,000 mi	60 000 km/37,500 mi	72 000 km/45,000 mi	84 000 km/52,500 mi	96 000 km/60,000 mi	108 000 km/67,500 mi	120 000 km/75,000 mi	132 000 km/82,500 mi	144 000 km/90,000 mi	156 000 km/97,500 mi	168 000 km/105,000 mi	180 000 km/112,500 mi	192 000 km/120,000 mi	204 000 km/127,500 mi	216 000 km/135,000 mi	228 000 km/142,500 mi	240 000 km/150,000 mi
Rotate tires and perform Required Services. Check engine oil level and oil life percentage. Change engine oil and filter, if needed. Check engine air filter life percentage and status. Change engine air filter, if needed.	✓	✓	✓	✓	✓	✓	✓	✓	✓	✓	✓	✓	✓	✓	✓	✓	✓	✓	✓	✓
Replace passenger compartment air filter. (1)			✓			✓			✓			✓			✓			✓		
Inspect evaporative control system. (2)						✓						✓						✓		
If the vehicle is not equipped with the engine air filter life system, replace engine air cleaner filter. (3)						✓						✓						✓		
Except 2.0L LTG and 6.2L LT4 Engines: Replace spark plugs. Inspect spark plug wires and/or boots.													✓							
Only 2.0L LTG and 6.2L LT4 Engines: Replace spark plugs. Inspect spark plug wires and/or boots.								✓								✓				
Drain and fill engine cooling system. (4)																				✓
Visually inspect accessory drive belts. (5)																				✓
Change rear axle fluid, if equipped with limited-slip differential. (6)						✓						✓						✓		
Change rear axle fluid, without limited-slip differential. (6)																				✓
Replace brake fluid. (7)																				
Replace windshield wiper blades. (8)		✓		✓		✓		✓		✓		✓		✓		✓		✓		✓

Maintenance Schedule Additional Required Services - Normal	12 000 km/7,500 mi	24 000 km/15,000 mi	36 000 km/22,500 mi	48 000 km/30,000 mi	60 000 km/37,500 mi	72 000 km/45,000 mi	84 000 km/52,500 mi	96 000 km/60,000 mi	108 000 km/67,500 mi	120 000 km/75,000 mi	132 000 km/82,500 mi	144 000 km/90,000 mi	156 000 km/97,500 mi	168 000 km/105,000 mi	180 000 km/112,500 mi	192 000 km/120,000 mi	204 000 km/127,500 mi	216 000 km/135,000 mi	228 000 km/142,500 mi	240 000 km/150,000 mi
Replace hood and/or body lift support gas struts. (9)										✓										✓
Replace air conditioning desiccant. (10)																				

Footnotes — Maintenance Schedule Additional Required Services - Normal

(1) Or every two years, whichever comes first. More frequent passenger compartment air filter replacement may be needed if driving in areas with heavy traffic, poor air quality, high dust levels, or environmental allergens. Passenger compartment air filter replacement may also be needed if there is reduced airflow, window fogging, or odors. Your GM dealer can help determine when to replace the filter.

(2) Visually check all fuel and vapor lines and hoses for proper attachment, connection, routing, and condition.

(3) Or every four years, whichever comes first. If driving in dusty conditions, inspect the filter at each oil change or more often as needed. See *Engine Air Cleaner/Filter* ⇨ *235*.

(4) Or every five years, whichever comes first. See *Cooling System* ⇨ *237*.

(5) Or every 10 years, whichever comes first. Inspect for fraying, excessive cracking, or damage; replace, if needed.

(6) Do not directly power wash the rear axle output seals. High pressure water can overcome the seals and contaminate the rear axle fluid. Contaminated fluid will decrease the life of the axle and should be replaced.

(7) If equipped with an automatic transmission, replace brake fluid every five years. If equipped with a manual transmission, replace brake/clutch fluid every three years. See *Brake Fluid* ⇨ *244*.

(8) Or every 12 months, whichever comes first. See *Wiper Blade Replacement* ⇨ *248*.

(9) Or every 10 years, whichever comes first. See *Gas Strut(s)* ⇨ *249*.

(10) Replace air conditioning desiccant every seven years.

Maintenance Schedule Additional Required Services - Severe	12 000 km/7,500 mi	24 000 km/15,000 mi	36 000 km/22,500 mi	48 000 km/30,000 mi	60 000 km/37,500 mi	72 000 km/45,000 mi	84 000 km/52,500 mi	96 000 km/60,000 mi	108 000 km/67,500 mi	120 000 km/75,000 mi	132 000 km/82,500 mi	144 000 km/90,000 mi	156 000 km/97,500 mi	168 000 km/105,000 mi	180 000 km/112,500 mi	192 000 km/120,000 mi	204 000 km/127,500 mi	216 000 km/135,000 mi	228 000 km/142,500 mi	240 000 km/150,000 mi
Rotate tires and perform Required Services. Check engine oil level and oil life percentage. Change engine oil and filter, if needed. Check engine air filter life percentage and status. Change engine air filter, if needed.	✓	✓	✓	✓	✓	✓	✓	✓	✓	✓	✓	✓	✓	✓	✓	✓	✓	✓	✓	✓
Replace passenger compartment air filter. (1)			✓			✓			✓			✓			✓			✓		
Inspect evaporative control system. (2)						✓						✓						✓		
If the vehicle is not equipped with the engine air filter life system, replace engine air cleaner filter. (3)						✓						✓						✓		
Change automatic transmission fluid and filter.						✓						✓						✓		
Change manual transmission fluid.						✓						✓						✓		
Except 2.0L LTG and 6.2L LT1 Engines: Replace spark plugs. Inspect spark plug wiresInspect spark plug wires and/or boots..													✓							
Only 2.0L LTG and 6.2L LT1 Engines: Replace spark plugs. Inspect spark plug wires and/or boots.								✓								✓				
Drain and fill engine cooling system. (4)																				✓
Visually inspect accessory drive belts. (5)																				✓

Maintenance Schedule Additional Required Services - Severe	12 000 km/7,500 mi	24 000 km/15,000 mi	36 000 km/22,500 mi	48 000 km/30,000 mi	60 000 km/37,500 mi	72 000 km/45,000 mi	84 000 km/52,500 mi	96 000 km/60,000 mi	108 000 km/67,500 mi	120 000 km/75,000 mi	132 000 km/82,500 mi	144 000 km/90,000 mi	156 000 km/97,500 mi	168 000 km/105,000 mi	180 000 km/112,500 mi	192 000 km/120,000 mi	204 000 km/127,500 mi	216 000 km/135,000 mi	228 000 km/142,500 mi	240 000 km/150,000 mi
Replace rear axle fluid. (6)						✓						✓						✓		
Replace brake fluid. (7)																				
Replace windshield wiper blades. (8)		✓		✓		✓		✓		✓		✓		✓		✓		✓		✓
Replace hood and/or body lift support gas struts. (9)										✓										✓
Replace air conditioning desiccant. (10)																				

Footnotes — Maintenance Schedule Additional Required Services - Severe

(1) Or every two years, whichever comes first. More frequent passenger compartment air filter replacement may be needed if driving in areas with heavy traffic, poor air quality, high dust levels, or environmental allergens. Passenger compartment air filter replacement may also be needed if there is reduced airflow, window fogging, or odors. Your GM dealer can help determine when to replace the filter.

(2) Visually check all fuel and vapor lines and hoses for proper attachment, connection, routing, and condition.

(3) Or every four years, whichever comes first. If driving in dusty conditions, inspect the filter at each oil change or more often as needed. See *Engine Air Cleaner/Filter* ⇨ *235*.

(4) Or every five years, whichever comes first. See *Cooling System* ⇨ *237*.

(5) Or every 10 years, whichever comes first. Inspect for fraying, excessive cracking, or damage; replace, if needed.

(6) Do not directly power wash the rear axle output seals. High pressure water can overcome the seals and contaminate the axle fluid. Contaminated fluid will

decrease the life of the axle and may drive the need for repair or replacement.

(7) If equipped with an automatic transmission, replace brake fluid every five years. If equipped with a manual transmission, replace brake/clutch fluid every three years. See *Brake Fluid* ⇨ *244*.

(8) Or every 12 months, whichever comes first. See *Wiper Blade Replacement* ⇨ *248*.

(9) Or every 10 years, whichever comes first. See *Gas Strut(s)* ⇨ *249*.

(10) Replace air conditioning desiccant every seven years.

Special Application Services

- Severe Commercial Use Vehicles Only: Lubricate chassis components every oil change.
- Have underbody flushing service performed. See "Underbody Maintenance" in *Exterior Care* ⇨ *294*.

Additional Maintenance and Care

Your vehicle is an important investment and caring for it properly may help to avoid future costly repairs. To maintain vehicle performance, additional maintenance services may be required.

It is recommended that your dealer perform these services — their trained dealer technicians know your vehicle best. Your dealer can also perform a thorough assessment with a multi-point inspection to recommend when your vehicle may need attention.

The following list is intended to explain the services and conditions to look for that may indicate services are required.

Battery

The 12-volt battery supplies power to start the engine and operate any additional electrical accessories.

- To avoid break-down or failure to start the vehicle, maintain a battery with full cranking power.
- Trained dealer technicians have the diagnostic equipment to test the battery and ensure that the connections and cables are corrosion-free.

Belts

- Belts may need replacing if they squeak or show signs of cracking or splitting.
- Trained dealer technicians have access to tools and equipment to inspect the belts and recommend adjustment or replacement when necessary.

Brakes

Brakes stop the vehicle and are crucial to safe driving.

- Signs of brake wear may include chirping, grinding, or squealing noises, or difficulty stopping.
- Trained dealer technicians have access to tools and equipment to inspect the brakes and recommend quality parts engineered for the vehicle.

Fluids

Proper fluid levels and approved fluids protect the vehicle's systems and components. See *Recommended Fluids and Lubricants* ⇨ *315* for GM approved fluids.

- Engine oil and windshield washer fluid levels should be checked at every fuel fill.
- Instrument cluster lights may come on to indicate that fluids may be low and need to be filled.

Hoses

Hoses transport fluids and should be regularly inspected to ensure that there are no cracks or leaks. With a multi-point inspection, your dealer can inspect the hoses and advise if replacement is needed.

Lamps

Properly working headlamps, taillamps, and brake lamps are important to see and be seen on the road.

- Signs that the headlamps need attention include dimming, failure to light, cracking, or damage. The brake lamps need to be checked periodically to ensure that they light when braking.
- With a multi-point inspection, your dealer can check the lamps and note any concerns.

Shocks and Struts

Shocks and struts help aid in control for a smoother ride.

- Signs of wear may include steering wheel vibration, bounce/sway while braking, longer stopping distance, or uneven tire wear.
- As part of the multi-point inspection, trained dealer technicians can visually inspect the shocks and struts for signs

of leaking, blown seals, or damage, and can advise when service is needed.

Tires

Tires need to be properly inflated, rotated, and balanced. Maintaining the tires can save money and fuel, and can reduce the risk of tire failure.

- Signs that the tires need to be replaced include three or more visible treadwear indicators; cord or fabric showing through the rubber; cracks or cuts in the tread or sidewall; or a bulge or split in the tire.
- Trained dealer technicians can inspect and recommend the right tires. Your dealer can also provide tire/wheel balancing services to ensure smooth vehicle operation at all speeds. Your dealer sells and services name brand tires.

Vehicle Care

To help keep the vehicle looking like new, vehicle care products are available from your dealer. For information on how to clean and protect the vehicle's interior and exterior, see *Interior Care* ⇨ *300* and *Exterior Care* ⇨ *294*.

Wheel Alignment

Wheel alignment is critical for ensuring that the tires deliver optimal wear and performance.

- Signs that the alignment may need to be adjusted include pulling, improper vehicle handling, or unusual tire wear.
- Your dealer has the required equipment to ensure proper wheel alignment.

Windshield

For safety, appearance, and the best viewing, keep the windshield clean and clear.

- Signs of damage include scratches, cracks, and chips.
- Trained dealer technicians can inspect the windshield and recommend proper replacement if needed.

Wiper Blades

Wiper blades need to be cleaned and kept in good condition to provide a clear view.

- Signs of wear include streaking, skipping across the windshield, and worn or split rubber.
- Trained dealer technicians can check the wiper blades and replace them when needed.

Recommended Fluids, Lubricants, and Parts

Recommended Fluids and Lubricants

If the vehicle is a Camaro High Performance model, see “Recommended Fluids and Lubricants” in the Camaro High Performance supplement. Fluids and lubricants identified below by name, part number, or specification can be obtained from your dealer.

Usage	Fluid/Lubricant
Automatic Transmission (8 Speed)	DEXRON-HP Automatic Transmission Fluid.
Automatic Transmission (10 Speed)	DEXRON ULV Automatic Transmission Fluid.
Engine Coolant	50/50 mixture of clean, drinkable water and use only DEX-COOL Coolant. See *Cooling System* ⇨ *237*.
Engine Oil (2.0L L4 and 3.6L V6 Engines)	Engine oil meeting the dexos1 specification of the proper SAE viscosity grade. ACDelco dexos1 full synthetic is recommended. See *Engine Oil* ⇨ *229*.
Engine Oil (6.2L V8 Engine)	Engine oil meeting the dexos2 specification of the proper SAE viscosity grade. ACDelco dexos2 is recommended. See *Engine Oil* ⇨ *229*.
Hood Latch Assembly, Secondary Latch, Pivots, Spring Anchor, and Release Pawl	Lubriplate Lubricant Aerosol (GM Part No. 89021668, in Canada 89021674) or lubricant meeting requirements of NLGI #2, Category LB or GC-LB.
Hydraulic Brake/Clutch System	DOT 3 Hydraulic Brake Fluid (GM Part No. 19353126, in Canada 19353127).
Key Lock Cylinders, Hood and Door Hinges	Multi-Purpose Lubricant, Superlube (GM Part No. 12346241, in Canada 10953474).

Usage	Fluid/Lubricant
Manual Transmission (L4 and V6 Engines)	DEXRON-VI Automatic Transmission Fluid.
Manual Transmission (V8 Engine)	Manual Transmission Fluid (GM Part No. 88861800, in Canada 88861801).
Parking Brake Cable Guides	Chassis Lubricant (GM Part No. 12377985, in Canada 88901242) or lubricant meeting requirements of NLGI #2, Category LB or GC-LB.
Rear Axle (L4 and V6 Engines with Automatic Transmission)	Dexron non-LSD Gear Oil (GM Part No. 88863089, in Canada 88863090).
Rear Axle (L4 and V6 Engines with Manual Transmission)	Dexron LS Gear Oil (GM Part No. 88862624, in Canada 88862625).
Rear Axle (V8 Engine)	Dexron LS Gear Oil (GM Part No. 88862624, in Canada 88862625).
Weatherstrip Conditioning	Weatherstrip Lubricant (GM Part No. 3634770, in Canada 10953518) or equivalent.
Windshield Washer	Automotive windshield washer fluid that meets regional freeze protection requirements.

Maintenance Replacement Parts

Replacement parts identified below by name, part number, or specification can be obtained from your dealer.

For Camaro High Performance models, see the Camaro High Performance supplement.

Part	GM Part Number	ACDelco Part Number
Engine Air Cleaner/Filter		
2.0L L4 Engine	20857930	A3178C
3.6L V6 Engine	20857930	A3178C
6.2L V8 Engine (LT1)	23323508	A3223C
Engine Oil Filter		
2.0L L4 Engine	12696048	PF64
3.6L V6 Engine	12693541	UPF63R
6.2L V8 Engine (LT1)	12640445	PF64
Passenger Compartment Air Filter	13508023	CF185
Spark Plugs		
2.0L L4 Engine	12647827	41-125
3.6L V6 Engine	12646780	41-130
6.2L V8 Engine (LT1)	12622441	41-114
Wiper Blades		
Driver Side – 55.8 cm (22 in)	84613732	—
Passenger Side – 50.8 cm (20 in)	84580859	—

Maintenance Records

After the scheduled services are performed, record the date, odometer reading, who performed the service, and the type of services performed in the boxes provided. Retain all maintenance receipts.

Date	Odometer Reading	Serviced By	Services Performed

Technical Data

Vehicle Identification
Vehicle Identification Number (VIN) 319
Service Parts Identification . . . 319

Vehicle Data
Capacities and Specifications 320
Engine Drive Belt Routing 323

Vehicle Identification

Vehicle Identification Number (VIN)

This legal identifier is in the front corner of the instrument panel, on the driver side of the vehicle. It can be seen through the windshield from outside. The Vehicle Identification Number (VIN) also appears on the Vehicle Certification and Service Parts labels and certificates of title and registration.

Engine Identification

The eighth character in the VIN is the engine code. This code identifies the vehicle's engine, specifications, and replacement parts. See “Engine Specifications” under *Capacities and Specifications* ⇨ *320* for the vehicle's engine code.

Service Parts Identification

There may be a large barcode on the certification label on the center pillar that you can scan for the following information:

- Vehicle Identification Number (VIN)
- Model designation
- Paint information
- Production options

If there is not a large barcode on this label, then you will find this same information on a label inside of the trunk.

Vehicle Data

Capacities and Specifications

For Camaro High Performance models, see the Camaro High Performance supplement.

Application	Capacities	
	Metric	English
Air Conditioning Refrigerant	For the air conditioning system refrigerant type and charge amount, see the refrigerant label under the hood. See your dealer for more information.	
Engine Cooling System*		
2.0L L4 Engine (LTG)	7.8 L	8.2 qt
3.6L V6 Engine (LGX)	9.6 L	10.1 qt
3.6L V6 Engine (LGX) with Engine Oil Cooler, without Auxiliary Cooler	10.1 L	10.7 qt
3.6L V6 Engine (LGX) with Auxiliary Cooler	13.7 L	14.5 qt
6.2L V8 Engine (LT1) without Auxiliary Cooler	11.6 L	12.3 qt
6.2L V8 Engine (LT1) with Auxiliary Cooler	13.2 L	13.9 qt
Engine Oil with Filter		
2.0L L4 Engine (LTG) with Integrated Engine Oil Cooler	4.7 L	5.0 qt
2.0L L4 Engine (LTG) with External Engine Oil Cooler	5.2 L	5.5 qt

Application	Capacities	
	Metric	English
3.6L V6 Engine (LGX) without Auxiliary Cooler	5.2 L	5.5 qt
3.6L V6 Engine (LGX) with Auxiliary Cooler	5.7 L	6.0 qt
6.2L V8 Engine (LT1)	9.5 L	10.0 qt
Fuel Tank	72.0 L	19.0 gal
Rear Axle Fluid		
2.0L L4 Engine (LTG) Automatic Transmission	0.5 L	0.53 qt
2.0L L4 Engine (LTG) Manual Transmission	1.1 L	1.2 qt
3.6L V6 Engine (LGX) Automatic Transmission	0.5 L	0.53 qt
3.6L V6 Engine (LGX) Manual Transmission	1.1 L	1.2 qt
6.2L V8 Engine (LT1)	1.1 L	1.2 qt
Wheel Nut Torque	190 N•m	140 lb ft
All capacities are approximate. When adding, be sure to fill to the approximate level, as recommended in this manual. Recheck fluid level after filling.		
*Engine cooling system capacity values are based on the entire cooling system and its components.		

Engine Specifications

Engine	VIN Code	Transmission	Spark Plug Gap
2.0L L4 Engine (LTG)	X	Automatic Manual	0.75–0.90 mm (0.030–0.035 in)
3.6L V6 Engine (LGX)	S	Automatic Manual	0.80–0.90 mm (0.031–0.035 in)
6.2L V8 Engine (LT1)	7	Automatic Manual	0.95–1.10 mm (0.037–0.043 in)
Spark plug gaps are preset by the manufacturer. Re-gapping the spark plug is not recommended and can damage the spark plug.			

Engine Drive Belt Routing

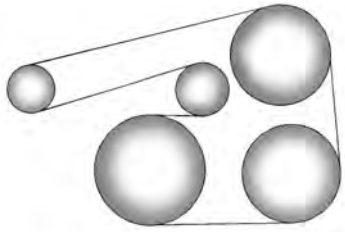

2.0L L4 Engine (LTG)

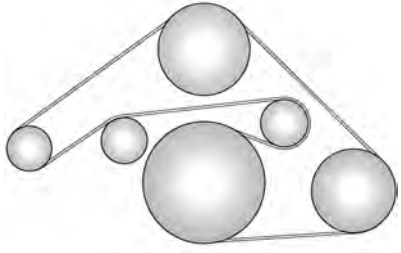

3.6L V6 Engine (LGX)

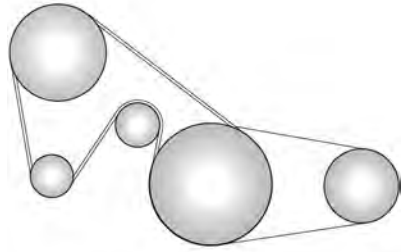

6.2L V8 Engine (LT1)

For Camaro High Performance models, see the Camaro High Performance supplement.

Customer Information

Customer Information
Customer Satisfaction Procedure 324
Customer Assistance Offices 326
Customer Assistance for Text Telephone (TTY) Users 327
Online Owner Center 327
GM Mobility Reimbursement Program 328
Roadside Assistance Program 328
Scheduling Service Appointments 330
Courtesy Transportation Program 330
Collision Damage Repair 331
Publication Ordering Information 333
Radio Frequency Statement 334

Reporting Safety Defects
Reporting Safety Defects to the United States Government 334
Reporting Safety Defects to the Canadian Government 335
Reporting Safety Defects to General Motors 335

Vehicle Data Recording and Privacy
Vehicle Data Recording and Privacy 336
Cybersecurity 336
Event Data Recorders 336
OnStar 337
Infotainment System 337

Customer Information

Customer Satisfaction Procedure

Your satisfaction and goodwill are important to your dealer and to Chevrolet. Normally, any concerns with the sales transaction or the operation of the vehicle will be resolved by your dealer's sales or service departments. Sometimes, however, despite the best intentions of all concerned, misunderstandings can occur. If your concern has not been resolved to your satisfaction, the following steps should be taken:

STEP ONE : Discuss your concern with a member of dealership management. Normally, concerns can be quickly resolved at that level. If the matter has already been reviewed with the sales, service, or parts manager, contact the owner of your dealership or the general manager.

STEP TWO : If after contacting a member of dealership management, it appears your concern cannot be

resolved by your dealership without further help, in the U.S., call the Chevrolet Customer Assistance Center at 1-800-222-1020. In Canada, call General Motors of Canada Customer Care Centre at 1-800-263-3777 (English), or 1-800-263-7854 (French).

We encourage you to call the toll-free number in order to give your inquiry prompt attention. Have the following information available to give the Customer Assistance representative:

- Vehicle Identification Number (VIN). This is available from the vehicle registration or title, or the plate at the top left of the instrument panel and visible through the windshield.
- Dealership name and location.
- Vehicle delivery date and present mileage.

When contacting Chevrolet, remember that your concern will likely be resolved at a dealer's facility. That is why we suggest following Step One first.

STEP THREE — U.S. Owners : Both General Motors and your dealer are committed to making sure you are completely satisfied with your new vehicle. However, if you continue to remain unsatisfied after following the procedure outlined in Steps One and Two, you can file with the Better Business Bureau (BBB) Auto Line Program to enforce your rights.

The BBB Auto Line Program is an out-of-court program administered by BBB National Programs, Inc. to settle automotive disputes regarding vehicle repairs or the interpretation of the New Vehicle Limited Warranty. Although you may be required to resort to this informal dispute resolution program prior to filing a court action, use of the program is free of charge and your case will generally be heard within 40 days. If you do not agree with the decision given in your case, you may reject it and proceed with any other venue for relief available to you.

You may contact the BBB Auto Line Program using the toll-free telephone number or write them at the following address:

BBB Auto Line Program
BBB National Programs, Inc.
3033 Wilson Boulevard
Suite 600
Arlington, VA 22201

Telephone: 1-800-955-5100
http://www.bbb.org/council/programs-services/dispute-handling-and-resolution/bbb-auto-line

This program is available in all 50 states and the District of Columbia. Eligibility is limited by vehicle age, mileage, and other factors. General Motors reserves the right to change eligibility limitations and/or discontinue its participation in this program.

STEP THREE — Canadian Owners : In the event that you do not feel your concerns have been addressed after following the procedure outlined in Steps One and Two, General Motors of Canada

Company wants you to be aware of its participation in a no-charge Mediation/Arbitration Program. General Motors of Canada Company has committed to binding arbitration of owner disputes involving factory-related vehicle service claims. The program provides for the review of the facts involved by an impartial third party arbiter, and may include an informal hearing before the arbiter. The program is designed so that the entire dispute settlement process, from the time you file your complaint to the final decision, should be completed in about 70 days. We believe our impartial program offers advantages over courts in most jurisdictions because it is informal, quick, and free of charge.

For further information concerning eligibility in the Canadian Motor Vehicle Arbitration Plan (CAMVAP), call toll-free 1-800-207-0685, or call the General Motors Customer Care Centre, 1-800-263-3777 (English), 1-800-263-7854 (French), or write to:

The Mediation/Arbitration Program
c/o Customer Care Centre
General Motors of Canada Company
Mail Code: CA1-163-005
1908 Colonel Sam Drive
Oshawa, Ontario L1H 8P7

Your inquiry should be accompanied by the Vehicle Identification Number (VIN).

Customer Assistance Offices

Chevrolet encourages customers to call the toll-free number for assistance. However, if a customer wishes to write or e-mail Chevrolet, the letter should be addressed to:

United States and Puerto Rico

Chevrolet Motor Division
Chevrolet Customer Assistance Center
P.O. Box 33170
Detroit, MI 48232-5170
www.Chevrolet.com

1-800-222-1020
1-800-833-2438 (For Text Telephone Devices (TTYs))
Roadside Assistance:
1-800-243-8872

From U.S. Virgin Islands:

1-800-496-9994

Canada

General Motors of Canada Company
Customer Care Centre, Mail Code: CA1-163-005
1908 Colonel Sam Drive
Oshawa, Ontario L1H 8P7
www.gm.ca

1-800-263-3777 (English)
1-800-263-7854 (French)
1-800-263-3830 (For Text

Telephone devices (TTYs))
Roadside Assistance:
1-800-268-6800

Overseas

Please contact the local General Motors Business Unit.

Customer Assistance for Text Telephone (TTY) Users

To assist customers who are deaf, hard of hearing, or speech-impaired and who use Text Telephones (TTYs), Chevrolet has TTY equipment available at its Customer Assistance Center. Any TTY user in the U.S. can communicate with Chevrolet by dialing:
1-800-833-2438. TTY users in Canada can dial 1-800-263-3830.

Online Owner Center

Online Owner Experience (U.S.) my.chevrolet.com

The Chevrolet online owner experience allows access to videos, articles, and vehicle health specific to your Chevrolet as well as your OnStar Account information all in one place.

Membership Benefits

: Download owner's manuals and view vehicle-specific how-to videos.

: View maintenance schedules, alerts, and Vehicle Diagnostic Information. Schedule service appointments.

: View and print dealer-recorded service records and self-recorded service records.

: Select a preferred dealer and view locations, maps, phone numbers, and hours.

: Track your vehicle's warranty information.

: View active recalls by Vehicle Identification Number (VIN). See *Vehicle Identification Number (VIN)* ⇨ *319*.

: Compare and shop for Chevrolet and OnStar plans and services. View GM Card and SiriusXM information (if equipped).

: Chat with online help representatives.

See my.chevrolet.com to register your vehicle.

Chevrolet Owner Centre (Canada) mychevrolet.ca

Visit the Chevrolet Owner Centre at mychevrolet.ca (English) or my.chevrolet.ca (French) to access similar benefits to the U.S. site.

GM Mobility Reimbursement Program

GENERAL MOTORS MOBILITY

This program is available to qualified applicants for cost reimbursement, up to certain limits, of eligible aftermarket adaptive equipment required for the vehicle, such as hand controls or a wheelchair/scooter lift for the vehicle.

To learn about the GM Mobility program, see www.gmmobility.com or call the GM Mobility Assistance Center at 1-800-323-9935. Text Telephone (TTY) users, call 1-800-833-9935.

General Motors of Canada also has a Mobility program. See www.gm.ca or call 1-800-GM-DRIVE (800-463-7483) for details. TTY users call 1-800-263-3830.

Roadside Assistance Program

For U.S.-purchased vehicles, call 1-800-243-8872. (Text Telephone (TTY): 1-888-889-2438.)

For Canadian-purchased vehicles, call 1-800-268-6800.

Service is available 24 hours a day, 365 days a year.

Calling for Assistance

When calling Roadside Assistance, have the following information ready:

- Your name, home address, and home telephone number
- Telephone number of your location
- Location of the vehicle
- Model, year, color, and license plate number of the vehicle
- Odometer reading, Vehicle Identification Number (VIN), and delivery date of the vehicle
- Description of the problem

Coverage

Services are provided for the duration of the vehicle's powertrain warranty.

In the U.S., anyone driving the vehicle is covered. In Canada, a person driving the vehicle without permission from the owner is not covered.

Roadside Assistance is not a part of the New Vehicle Limited Warranty. General Motors North America and Chevrolet reserve the right to make any changes or discontinue the Roadside Assistance program at any time without notification.

General Motors North America and Chevrolet reserve the right to limit services or payment to an owner or driver if they decide the claims are made too often, or the same type of claim is made many times.

Services Provided

- **Emergency Fuel Delivery:** Delivery of enough fuel for the vehicle to get to the nearest service station.

- **Lock-Out Service:** Service to unlock the vehicle if you are locked out. A remote unlock may be available if you have OnStar. For security reasons, the driver must present identification before this service is given.
- **Emergency Tow from a Public Road or Highway:** Tow to the nearest Chevrolet dealer for warranty service, or if the vehicle was in a crash and cannot be driven. Assistance is not given when the vehicle is stuck in the sand, mud, or snow.
- **Flat Tire Change:** Service to change a flat tire with the spare tire. The spare tire, if equipped, must be in good condition and properly inflated. It is the owner's responsibility for the repair or replacement of the tire if it is not covered by the warranty.
- **Battery Jump Start:** Service to jump start a dead battery.
- **Trip Interruption Benefits and Assistance:** If your trip is interrupted due to a warranty event, incidental expenses may be reimbursed within the Powertrain warranty period. Items considered are reasonable and customary hotel, meals, rental car, or a vehicle being delivered back to the customer, up to 500 miles.

Services Not Included in Roadside Assistance

- Impound towing caused by violation of any laws
- Legal fines
- Mounting, dismounting, or changing of snow tires, chains, or other traction devices

Service is not provided if a vehicle is in an area that is not accessible to the service vehicle or is not a regularly traveled or maintained public road, which includes ice and winter roads. Off-road use is not covered.

Services Specific to Canadian-Purchased Vehicles

- **Fuel Delivery:** Reimbursement is up to 7 liters. If available, diesel fuel delivery may be restricted. Propane and other fuels are not provided through this service.
- **Lock-Out Service:** Vehicle registration is required.
- **Trip Interruption Benefits and Assistance:** Must be over 150 km from where your trip was started to qualify. Pre-authorization, original detailed receipts, and a copy of the repair orders are required. Once authorization has been received, the Roadside Assistance advisor will help to make arrangements and explain how to receive payment.
- **Alternative Service:** If assistance cannot be provided right away, the Roadside Assistance advisor may give permission to get local emergency road service. You will

receive payment, up to $100, after sending the original receipt to Roadside Assistance. Mechanical failures may be covered, however any cost for parts and labor for repairs not covered by the warranty are the owner responsibility.

Scheduling Service Appointments

When the vehicle requires warranty service, contact your dealer and request an appointment. By scheduling a service appointment and advising the service consultant of your transportation needs, your dealer can help minimize your inconvenience.

If the vehicle cannot be scheduled into the service department immediately, keep driving it until it can be scheduled for service, unless, of course, the problem is safety related. If it is, please call your dealership, let them know this, and ask for instructions.

If your dealer requests you to bring the vehicle for service, you are urged to do so as early in the work day as possible to allow for same-day repair.

Courtesy Transportation Program

To enhance your ownership experience, we and our participating dealers are proud to offer Courtesy Transportation, a customer support program for vehicles with the Bumper-to-Bumper (Base Warranty Coverage period in Canada), extended powertrain, and/or hybrid-specific warranties in both the U.S. and Canada.

Several Courtesy Transportation options are available to assist in reducing inconvenience when warranty repairs are required.

Courtesy Transportation is not a part of the New Vehicle Limited Warranty. A separate manual entitled “Limited Warranty and Owner Assistance Information” furnished with each new vehicle provides detailed warranty coverage information.

Transportation Options

Warranty service can generally be completed while you wait. However, if you are unable to do so, your dealer may offer the following transportation options:

Shuttle Service

This includes one-way or round-trip shuttle service within reasonable time and distance parameters of your dealer's area.

Public Transportation or Fuel Reimbursement

If overnight warranty repairs are needed, and public transportation is used, the expense must be supported by original receipts and within the maximum amount allowed by GM. If U.S. customers arrange their own transportation, limited reimbursement for reasonable fuel expenses may be available. Claim amounts should reflect actual costs

and be supported by original receipts. See your dealer for information.

Courtesy Rental Vehicle

For an overnight warranty repair, the dealer may provide an available courtesy rental vehicle or provide for reimbursement of a rental vehicle. Reimbursement is limited and must be supported by original receipts as well as a signed and completed rental agreement and meet state/provincial, local, and rental vehicle provider requirements. Requirements vary and may include minimum age requirements, insurance coverage, credit card, etc. Additional fees such as fuel, rental vehicle insurance, taxes, levies, usage fees, excessive mileage, or rental usage beyond the completion of the repair are also your responsibility.

It may not be possible to provide a like vehicle as a courtesy rental.

Additional Program Information

All program options, such as shuttle service, may not be available at every dealer. Contact your dealer for specific availability.

General Motors reserves the right to unilaterally modify, change, or discontinue Courtesy Transportation at any time and to resolve all questions of claim eligibility pursuant to the terms and conditions described herein at its sole discretion.

Collision Damage Repair

If the vehicle is involved in a collision and it is damaged, have the damage repaired by a qualified technician using the proper equipment and quality replacement parts. Poorly performed collision repairs diminish the vehicle resale value, and safety performance can be compromised in subsequent collisions.

Collision Parts

Genuine GM Collision parts are new parts made with the same materials and construction methods as the parts with which the vehicle was originally built. Genuine GM Collision parts are the best choice to ensure that the vehicle's designed appearance, durability, and safety are preserved. The use of Genuine GM parts can help maintain the GM New Vehicle Limited Warranty.

Recycled original equipment parts may also be used for repair. These parts are typically removed from vehicles that were total losses in prior crashes. In most cases, the parts being recycled are from undamaged sections of the vehicle. A recycled original equipment GM part may be an acceptable choice to maintain the vehicle's originally designed appearance and safety performance; however, the history of these parts is not known. Such parts are not covered by the GM New Vehicle Limited Warranty, and any related failures are not covered by that warranty.

Aftermarket collision parts are also available. These are made by companies other than GM and may not have been tested for the vehicle. As a result, these parts may fit poorly, exhibit premature durability/corrosion problems, and may not perform properly in subsequent collisions. Aftermarket parts are not covered by the GM New Vehicle Limited Warranty, and any vehicle failure related to such parts is not covered by that warranty.

Repair Facility

GM also recommends that you choose a collision repair facility that meets your needs before you ever need collision repairs. Your dealer may have a collision repair center with GM-trained technicians and state-of-the-art equipment, or be able to recommend a collision repair center that has GM-trained technicians and comparable equipment.

Insuring the Vehicle

Protect your investment in the GM vehicle with comprehensive and collision insurance coverage. There are significant differences in the quality of coverage afforded by various insurance policy terms. Many insurance policies provide reduced protection to the GM vehicle by limiting compensation for damage repairs through the use of aftermarket collision parts. Some insurance companies will not specify aftermarket collision parts. When purchasing insurance, we recommend that you ensure that the vehicle will be repaired with GM original equipment collision parts. If such insurance coverage is not available from your current insurance carrier, consider switching to another insurance carrier.

If the vehicle is leased, the leasing company may require you to have insurance that ensures repairs with Genuine GM Original Equipment Manufacturer (OEM) parts or Genuine Manufacturer replacement parts. Read the lease carefully, as you may be charged at the end of the lease for poor quality repairs.

If a Crash Occurs

If there has been an injury, call emergency services for help. Do not leave the scene of a crash until all matters have been taken care of. Move the vehicle only if its position puts you in danger, or you are instructed to move it by a police officer.

Give only the necessary information to police and other parties involved in the crash.

For emergency towing see *Roadside Assistance Program* ⇨ *328*.

Gather the following information:

- Driver name, address, and telephone number
- Driver license number
- Owner name, address, and telephone number
- Vehicle license plate number

- Vehicle make, model, and model year
- Vehicle Identification Number (VIN)
- Insurance company and policy number
- General description of the damage to the other vehicle

Choose a reputable repair facility that uses quality replacement parts. See “Collision Parts” earlier in this section.

If the airbag has inflated, see *What Will You See after an Airbag Inflates?* ⇨ *62*.

Managing the Vehicle Damage Repair Process

In the event that the vehicle requires damage repairs, GM recommends that you take an active role in its repair. If you have a pre-determined repair facility of choice, take the vehicle there, or have it towed there. Specify to the facility that any required replacement collision parts be original equipment parts, either new Genuine GM parts or recycled original GM parts. Remember, recycled parts will not be covered by the GM vehicle warranty.

Insurance pays the bill for the repair, but you must live with the repair. Depending on your policy limits, your insurance company may initially value the repair using aftermarket parts. Discuss this with the repair professional, and insist on Genuine GM parts. Remember, if the vehicle is leased, you may be obligated to have the vehicle repaired with Genuine GM parts, even if your insurance coverage does not pay the full cost.

If another party's insurance company is paying for the repairs, you are not obligated to accept a repair valuation based on that insurance company's collision policy repair limits, as you have no contractual limits with that company. In such cases, you can have control of the repair and parts choices as long as the cost stays within reasonable limits.

Publication Ordering Information

Service Manuals

Service manuals have the diagnosis and repair information on the engine, transmission, axle, suspension, brakes, electrical system, steering system, body, etc.

Customer Literature

Owner’s manuals are written specifically for owners and are intended to provide basic operational information about the vehicle. The owner’s manual includes the Maintenance Schedule for all models.

Customer literature publications available for purchase include owner’s manuals, warranty manuals, infotainment manuals, and portfolios. Portfolios include an owner’s manual, warranty manual, infotainment manual, if applicable, and zip lock bag or pouch.

Current and Past Models

Service manuals and customer literature are available for many current and past model year GM vehicles.

To order, call 1-800-551-4123 Monday–Friday, 8:00 a.m.–6:00 p.m. eastern time

For credit card orders only (VISA, MasterCard, or Discover), see Helm, Inc. at: www.helminc.com.

To order by mail, write to:

Helm, Incorporated
Attention: Customer Service
47911 Halyard Drive
Plymouth, MI 48170

Make checks payable in U.S. funds.

Radio Frequency Statement

This vehicle has systems that operate on a radio frequency that complies with Part 15/Part 18 of the Federal Communications Commission (FCC) rules and with Innovation, Science and Economic Development (ISED) Canada's RSP-100 / ICES-GEN.

Operation is subject to the following two conditions:

1. The device may not cause harmful interference.
2. The device must accept any interference received, including interference that may cause undesired operation of the device.

Changes or modifications to any of these systems by other than an authorized service facility could void authorization to use this equipment.

Reporting Safety Defects

Reporting Safety Defects to the United States Government

If you believe that your vehicle has a defect which could cause a crash or could cause injury or death, you should immediately inform the National Highway Traffic Safety Administration (NHTSA) in addition to notifying General Motors.

If NHTSA receives similar complaints, it may open an investigation, and if it finds that a safety defect exists in a group of vehicles, it may order a recall and remedy campaign. However, NHTSA cannot become involved in individual problems between you, your dealer, or General Motors.

To contact NHTSA, you may call the Vehicle Safety Hotline toll-free at 1-888-327-4236 (TTY: 1-800-424-9153); go to *http://www.safercar.gov;* or write to:

Administrator, NHTSA
1200 New Jersey Avenue, S.E.
Washington, D.C. 20590

You can also obtain other information about motor vehicle safety from *http://www.safercar.gov*.

Reporting Safety Defects to the Canadian Government

If you live in Canada, and you believe that the vehicle has a safety defect, notify Transport Canada immediately, and notify General Motors of Canada Company. Call Transport Canada at 1-800-333-0510; go to:

www.tc.gc.ca/recalls (English)

www.tc.gc.ca/rappels (French)

or write to:

Transport Canada
Motor Vehicle Safety Directorate
Defect Investigations and Recalls Division
80 Noel Street
Gatineau, QC J8Z 0A1

Reporting Safety Defects to General Motors

In addition to notifying NHTSA (or Transport Canada) in a situation like this, notify General Motors.

In the U.S., call 1-800-222-1020, or write:

Chevrolet Motor Division
Chevrolet Customer Assistance Center
P.O. Box 33170
Detroit, MI 48232-5170

In Canada, call 1-800-263-3777 (English) or 1-800-263-7854 (French), or write:

General Motors of Canada Company
Customer Care Centre, Mail Code: CA1-163-005
1908 Colonel Sam Drive
Oshawa, Ontario L1H 8P7

In Mexico, call 01-800-466-0811 or 01-800-508-0000.

In other Central America and Caribbean Countries, call 52-722-236-0680.

Vehicle Data Recording and Privacy

The vehicle has a number of computers that record information about the vehicle's performance and how it is driven or used. For example, the vehicle uses computer modules to monitor and control engine and transmission performance, to monitor the conditions for airbag deployment and deploy them in a crash, and, if equipped, to provide antilock braking to help the driver control the vehicle. These modules may store data to help the dealer technician service the vehicle or to help GM improve safety or features. Some modules may also store data about how the vehicle is operated, such as rate of fuel consumption or average speed. These modules may retain personal preferences, such as radio presets, seat positions, and temperature settings.

Cybersecurity

GM collects information about the use of your vehicle including operational and safety related information. We collect this information to provide, evaluate, improve, and troubleshoot our products and services and to develop new products and services. The protection of vehicle electronics systems and customer data from unauthorized outside electronic access or control is important to GM. GM maintains appropriate security standards, practices, guidelines and controls aimed at defending the vehicle and the vehicle service ecosystem against unauthorized electronic access, detecting possible malicious activity in related networks, and responding to suspected cybersecurity incidents in a timely, coordinated and effective manner. Security incidents could impact your safety or compromise your private data. To minimize security risks, please do not connect your vehicle electronic systems to unauthorized devices or connect your vehicle to any unknown or untrusted networks (such as Bluetooth, WIFI or similar technology). In the event you suspect any security incident impacting your data or the safe operation of your vehicle, please stop operating your vehicle and contact your dealer.

Event Data Recorders

This vehicle is equipped with an event data recorder (EDR). The main purpose of an EDR is to record, in certain crash or near crash-like situations, such as an air bag deployment or hitting a road obstacle, data that will assist in understanding how a vehicle's systems performed. The EDR is designed to record data related to vehicle dynamics and safety systems for a short period of time, typically 30 seconds or less. The EDR in this vehicle is designed to record such data as:

- How various systems in your vehicle were operating;

- Whether or not the driver and passenger safety belts were buckled/fastened;
- How far (if at all) the driver was depressing the accelerator and/or brake pedal; and,
- How fast the vehicle was traveling.

These data can help provide a better understanding of the circumstances in which crashes and injuries occur.

Note

EDR data are recorded by your vehicle only if a non-trivial crash situation occurs; no data are recorded by the EDR under normal driving conditions and no personal data (e.g., name, gender, age, and crash location) are recorded. However, other parties, such as law enforcement, could combine the EDR data with the type of personally identifying data routinely acquired during a crash investigation.

To read data recorded by an EDR, special equipment is required, and access to the vehicle or the EDR is needed. In addition to the vehicle manufacturer, other parties, such as law enforcement, that have the special equipment, can read the information if they have access to the vehicle or the EDR.

GM will not access these data or share it with others except: with the consent of the vehicle owner or, if the vehicle is leased, with the consent of the lessee; in response to an official request by police or similar government office; as part of GM's defense of litigation through the discovery process; or, as required by law. Data that GM collects or receives may also be used for GM research needs or may be made available to others for research purposes, where a need is shown and the data is not tied to a specific vehicle or vehicle owner.

OnStar

If the vehicle is equipped with OnStar and has an active service plan, additional data may be collected and transmitted through the OnStar system. This includes information about the vehicle's operation; collisions involving the vehicle; the use of the vehicle and its features, including infotainment; and the location and approximate GPS speed of the vehicle. Refer to the OnStar Terms and Conditions and Privacy Statement on the OnStar website.

See *OnStar Additional Information* ⇨ *340*.

Infotainment System

If the vehicle is equipped with a navigation system as part of the infotainment system, use of the system may result in the storage of destinations, addresses, telephone numbers, and other trip information. See the infotainment manual for information on stored data and for deletion instructions.

OnStar

OnStar Overview
OnStar Overview 338

OnStar Services
Emergency 339
Security 340

OnStar Additional Information
OnStar Additional Information 340

OnStar Overview

Voice Command Button

Blue OnStar Button

Red Emergency Button

This vehicle may be equipped with a comprehensive, in-vehicle system that can connect to an OnStar Advisor for Emergency, Security, Navigation, Connections, and Diagnostics Services. OnStar services may require a paid service plan and data plan. OnStar requires the vehicle battery and electrical system, cellular service, and GPS satellite signals to be available and operating. OnStar acts as a link to existing emergency service providers. OnStar may collect information about you and your vehicle, including location information. See OnStar User Terms, Privacy Statement, and Software Terms for more details including system limitations at www.onstar.com (U.S.) or www.onstar.ca (Canada).

The OnStar system status light is next to the OnStar buttons. If the status light is:

- Solid Green: System is ready.
- Flashing Green: On a call.
- Red: Indicates a problem.
- Off: System is off. Press twice to speak with an OnStar Advisor.

Press or call 1-888-4ONSTAR (1-888-466-7827) to speak to an Advisor.

Functionality of the Voice Command button may vary by vehicle and region.

Press to:

- Open the OnStar app on the infotainment display. See the infotainment manual for information on how to use the OnStar app.

Or

- Give OnStar Turn-by-Turn Navigation voice commands.
- Obtain and customize the Wi-Fi hotspot name or SSID and password, if equipped.

Press to connect to an Advisor to:

- Verify account information or update contact information.
- Get driving directions.
- Receive a Diagnostic check of the vehicle's key operating systems.
- Receive Roadside Assistance.
- Manage Wi-Fi Settings, if equipped.

Press SOS to get a priority connection to an OnStar Advisor available 24/7 to:

- Get help for an emergency.
- Be a Good Samaritan or respond to an AMBER Alert.
- Get assistance in severe weather or other crisis situations and find evacuation routes.

OnStar Services

Emergency

Emergency Services require an active safety and security plan. With Automatic Crash Response, built-in sensors can automatically alert a specially trained OnStar Advisor who is immediately connected in to the vehicle to help.

Press SOS for a priority connection to an OnStar Advisor who can contact emergency service providers, direct them to your exact location, and relay important information.

With OnStar Crisis Assist, specially trained Advisors are available 24 hours a day, 7 days a week, to provide a central point of contact, assistance, and information during a crisis.

With Roadside Assistance, Advisors can locate a nearby service provider to help with a flat tire, a battery jump, or an empty gas tank.

Security

If equipped, OnStar provides these services:

- With Stolen Vehicle Assistance, OnStar Advisors can use GPS to pinpoint the vehicle and help authorities quickly recover it.
- With Remote Ignition Block, if equipped, OnStar can block the engine from being restarted.
- With Stolen Vehicle Slowdown, if equipped, OnStar can work with law enforcement to gradually slow the vehicle down.

Theft Alarm Notification

If equipped, if the doors are locked and the vehicle alarm sounds, a notification by text, e-mail, or phone call will be sent. If the vehicle is stolen, an OnStar Advisor can work with authorities to recover the vehicle.

OnStar Additional Information

In-Vehicle Audio Messages

Audio messages may play important information at the following times:

- Prior to vehicle purchase. Press Ⓞⓝ to set up an account.
- After change in ownership and at 90 days.

Transferring Service

Press Ⓞⓝ to request account transfer eligibility information. The Advisor can cancel or change account information.

Selling/Transferring the Vehicle

Call 1-888-4ONSTAR (1-888-466-7827) immediately to terminate your OnStar or connected services if the vehicle is disposed of, sold, transferred, or if the lease ends.

Reactivation for Subsequent Owners

Press Ⓞⓝ and follow the prompts to speak to an Advisor as soon as possible. The Advisor will update vehicle records and explain OnStar or connected service options.

How OnStar Service Works

Automatic Crash Response, Emergency Services, Crisis Assist, Stolen Vehicle Assistance, Remote Services, and Roadside Assistance are available on most vehicles. Not all OnStar services are available everywhere or on all vehicles. For more information, a full description of OnStar services, system limitations, and OnStar User Terms, Privacy Statement, and Software Terms:

- Call 1-888-4ONSTAR (1-888-466-7827).
- See www.onstar.com (U.S.).
- See www.onstar.ca (Canada).
- Call TTY 1-877-248-2080.

- Press Ⓞⓝ to speak with an Advisor.

OnStar or connected services cannot work unless the vehicle is in a place where OnStar has an agreement with a wireless service provider for service in that area. The wireless service provider must also have coverage, network capacity, reception, and technology compatible with OnStar or connected services. Service involving location information about the vehicle cannot work unless GPS signals are available, unobstructed, and compatible with the OnStar hardware. OnStar or connected services may not work if the OnStar equipment is not properly installed or it has not been properly maintained. If equipment or software is added, connected, or modified, OnStar or connected services may not work. Other problems beyond the control of OnStar — such as hills, tall buildings, tunnels, weather, electrical system design and architecture of the vehicle, damage to the vehicle in a crash, or wireless phone network congestion or jamming — may prevent service.

See *Radio Frequency Statement* ⇨ *334*.

Services for People with Disabilities

Advisors provide services to help with physical disabilities and medical conditions.

Press Ⓞⓝ to help:

- Locate a gas station with an attendant to pump gas.
- Find a hotel, restaurant, etc., that meets accessibility needs.
- Provide directions to the closest hospital or pharmacy in urgent situations.

TTY Users

OnStar has the ability to communicate to deaf, hard-of-hearing, or speech-impaired customers while in the vehicle. The available dealer-installed TTY system can provide in-vehicle access to all OnStar services, except Virtual Advisor and OnStar Turn-by-Turn Navigation.

If equipped, TTY mode can be turned on or off by touching Settings, then Apps, and then Phone. When TTY mode is on, phone calls can be made or received with OnStar using the infotainment display.

OnStar Personal Identification Number (PIN)

A PIN is needed to access some OnStar services. The PIN will need to be changed the first time when speaking with an Advisor. To change the OnStar PIN, contact an OnStar Advisor by pressing Ⓞⓝ or calling 1-888-4ONSTAR.

Warranty

OnStar equipment may be warranted as part of the vehicle warranty.

Languages

The vehicle can be programmed to respond in multiple languages.

Press On and ask for an Advisor. Advisors are available in English, Spanish, and French. Available languages may vary by country.

Potential Issues

OnStar cannot perform Remote Door Unlock or Stolen Vehicle Assistance after the vehicle has been off continuously for 10 days without an ignition cycle. If the vehicle has not been started for 10 days, OnStar can contact Roadside Assistance or a locksmith to help gain access to the vehicle.

Global Positioning System (GPS)

- Obstruction of the GPS can occur in a large city with tall buildings; in parking garages; around airports; in tunnels and underpasses; or in an area with very dense trees. If GPS signals are not available, the OnStar system should still operate to call OnStar. However, OnStar could have difficulty identifying the exact location.
- In emergency situations, OnStar can use the last stored GPS location to send to emergency responders.

A temporary loss of GPS can cause loss of the ability to send a Turn-by-Turn Navigation route. The Advisor may give a verbal route or may ask for a call back after the vehicle is driven into an open area.

Cellular and GPS Antennas

Cellular reception is required for OnStar to send remote signals to the vehicle. Do not place items over or near the antenna to prevent blocking cellular and GPS signal reception.

Unable to Connect to OnStar Message

If there is limited cellular coverage or the cellular network has reached maximum capacity, this message may come on. Press On to try the call again or try again after driving a few miles into another cellular area.

Vehicle and Power Issues

OnStar services require a vehicle electrical system, wireless service, and GPS satellite technologies to be available and operating for features to function properly. These systems may not operate if the battery is discharged or disconnected.

Add-on Electrical Equipment

The OnStar system is integrated into the electrical architecture of the vehicle. Do not add any electrical equipment. See *Add-On Electrical Equipment* ⇨ *218*. Added electrical equipment may interfere with the operation of the OnStar system and cause it to not operate.

Vehicle Software Updates

OnStar or GM may remotely deliver software updates or changes to the vehicle without further notice or consent. These updates or changes may enhance or maintain safety,

security, or the operation of the vehicle or the vehicle systems. Software updates or changes may affect or erase data or settings that are stored in the vehicle, such as saved navigation destinations, or pre-set radio stations. Neither OnStar nor GM is responsible for any affected or erased data or settings. These updates or changes may also collect personal information. Such collection is described in the OnStar privacy statement or separately disclosed at the time of installation. These updates or changes may also cause a system to automatically communicate with GM servers to collect information about vehicle system status, identify whether updates or changes are available, or deliver updates or changes. An active OnStar agreement constitutes consent to these software updates or changes and agreement that either OnStar or GM may remotely deliver them to the vehicle.

Privacy

The complete OnStar Privacy Statement may be found at www.onstar.com (U.S.), or www.onstar.ca (Canada). We recommend that you review it. If you have any questions, call 1-888-4ONSTAR (1-888-466-7827) or press Ⓞ to speak with an Advisor. Users of wireless communications are cautioned that the privacy of any information sent via wireless cellular communications cannot be assured. Third parties may unlawfully intercept or access transmissions and private communications without consent.

OnStar - Software Acknowledgements

Certain OnStar components include libcurl and unzip software and other third party software. Below are the notices and licenses associated with libcurl and unzip and for other third party software please see http://opensource.lge.com/index

www.onstar.com/us/en/

libcurl:

COPYRIGHT AND PERMISSION NOTICE

Copyright (c) 1996 - 2010, Daniel Stenberg, <daniel@haxx.se>.

All rights reserved.

Permission to use, copy, modify, and distribute this software for any purpose with or without fee is hereby granted, provided that the above copyright notice and this permission notice appear in all copies.

THE SOFTWARE IS PROVIDED “AS IS,” WITHOUT WARRANTY OF ANY KIND, EXPRESS OR IMPLIED, INCLUDING BUT NOT LIMITED TO THE WARRANTIES OF MERCHANTABILITY, FITNESS FOR A PARTICULAR PURPOSE AND NONINFRINGEMENT OF THIRD PARTY RIGHTS. IN NO EVENT SHALL THE AUTHORS OR COPYRIGHT HOLDERS BE LIABLE FOR ANY CLAIM, DAMAGES OR OTHER LIABILITY, WHETHER IN AN ACTION OF CONTRACT, TORT OR

OTHERWISE, ARISING FROM, OUT OF OR IN CONNECTION WITH THE SOFTWARE OR THE USE OR OTHER DEALINGS IN THE SOFTWARE.

Except as contained in this notice, the name of a copyright holder shall not be used in advertising or otherwise to promote the sale, use or other dealings in this Software without prior written authorization of the copyright holder.

unzip:

This is version 2005-Feb-10 of the Info-ZIP copyright and license. The definitive version of this document should be available at ftp://ftp.info-zip.org/pub/infozip/license.html indefinitely.

Copyright (c) 1990-2005 Info-ZIP. All rights reserved.

For the purposes of this copyright and license, “Info-ZIP” is defined as the following set of individuals:

Mark Adler, John Bush, Karl Davis, Harald Denker, Jean-Michel Dubois, Jean-loup Gailly, Hunter Goatley, Ed Gordon, Ian Gorman, Chris Herborth, Dirk Haase, Greg Hartwig, Robert Heath, Jonathan Hudson, Paul Kienitz, David Kirschbaum, Johnny Lee, Onno van der Linden, Igor Mandrichenko, Steve P. Miller, Sergio Monesi, Keith Owens, George Petrov, Greg Roelofs, Kai Uwe Rommel, Steve Salisbury, Dave Smith, Steven M. Schweda, Christian Spieler, Cosmin Truta, Antoine Verheijen, Paul von Behren, Rich Wales, Mike White.

This software is provided “as is,” without warranty of any kind, express or implied. In no event shall Info-ZIP or its contributors be held liable for any direct, indirect, incidental, special or consequential damages arising out of the use of or inability to use this software.

Permission is granted to anyone to use this software for any purpose, including commercial applications, and to alter it and redistribute it freely, subject to the following restrictions:

1. Redistributions of source code must retain the above copyright notice, definition, disclaimer, and this list of conditions.
2. Redistributions in binary form (compiled executables) must reproduce the above copyright notice, definition, disclaimer, and this list of conditions in documentation and/or other materials provided with the distribution. The sole exception to this condition is redistribution of a standard UnZipSFX binary (including SFXWiz) as part of a self-extracting archive; that is permitted without inclusion of this license, as long as the normal SFX banner has not been removed from the binary or disabled.
3. Altered versions–including, but not limited to, ports to new operating systems, existing ports with new graphical interfaces, and dynamic, shared, or static library versions–must be plainly marked as such and must not

be misrepresented as being the original source. Such altered versions also must not be misrepresented as being Info-ZIP releases–including, but not limited to, labeling of the altered versions with the names “Info-ZIP” (or any variation thereof, including, but not limited to, different capitalizations), “Pocket UnZip,” “WiZ” or “MacZip” without the explicit permission of Info-ZIP. Such altered versions are further prohibited from misrepresentative use of the Zip-Bugs or Info-ZIP e-mail addresses or of the Info-ZIP URL(s).

4. Info-ZIP retains the right to use the names “Info-ZIP,” “Zip,” “UnZip,” “UnZipSFX,” “WiZ,” “Pocket UnZip,” “Pocket Zip,” and “MacZip” for its own source and binary releases.

Connected Services

Connected Services
Navigation 346
Connections 347
Diagnostics 348

Connected Services

Navigation

Navigation requires a specific OnStar or connected service plan.

Press On to receive Turn-by-Turn directions or have them sent to the vehicle navigation screen, if equipped.

Turn-by-Turn Navigation

1. Press On to connect to an Advisor.
2. Request directions to be downloaded to the vehicle.
3. Follow the voice-guided commands.

Using Voice Commands During a Planned Route

Functionality of the Voice Command button, if equipped, may vary by vehicle and region. For some vehicles, press to open the OnStar app on the infotainment display. For other vehicles press as follows.

Cancel Route

1. Press . System responds: “OnStar ready,” then a tone.
2. Say “Cancel route.” System responds: “Do you want to cancel directions?”
3. Say “Yes.” System responds: “OK, request completed, thank you, goodbye.”

Route Preview

1. Press . System responds: “OnStar ready,” then a tone.
2. Say “Route preview.” System responds with the next three maneuvers.

Repeat

1. Press . System responds: “OnStar ready,” then a tone.

2. Say “Repeat.” System responds with the last direction given, then responds with “OnStar ready,” then a tone.

Get My Destination

1. Press . System responds: “OnStar ready,” then a tone.
2. Say “Get my destination.” System responds with the address and distance to the destination, then responds with “OnStar ready,” then a tone.

Send Destination to Vehicle

Directions can be sent to the vehicle’s navigation screen, if equipped.

Press then ask the Advisor to download directions to the vehicle’s navigation system, if equipped. After the call ends, the navigation screen will provide prompts to begin driving directions. Routes that are sent to the navigation screen can only be canceled through the navigation system.

See www.onstar.com (U.S.) or www.onstar.ca (Canada).

Connections

The following services help with staying connected.

For coverage maps, see www.onstar.com (U.S.) or www.onstar.ca (Canada).

Ensuring Security

- Change the default passwords for the Wi-Fi hotspot and myChevrolet mobile application. Make these passwords different from each other and use a combination of letters and numbers to increase the security.
- Change the default name of the SSID (Service Set Identifier). This is your network’s name that is visible to other wireless devices. Choose a unique name and avoid family names or vehicle descriptions.

Wi-Fi Hotspot (If Equipped)

The vehicle may have a built-in Wi-Fi hotspot that provides access to the Internet and web content at 4G LTE speed. Up to seven mobile devices can be connected. A data plan is required. Use the in-vehicle controls only when it is safe to do so.

1. To retrieve Wi-Fi hotspot information, press to open the OnStar app on the infotainment display, then select Wi-Fi Hotspot. On some vehicles, touch Wi-Fi or Wi-Fi Settings on the screen.
2. The Wi-Fi settings will display the Wi-Fi hotspot name (SSID), password, and on some vehicles, the connection type (no Internet connection, 3G, 4G, 4G LTE), and signal quality (poor, good, excellent).
3. To change the SSID or password, press or call 1-888-4ONSTAR to connect with an Advisor. On some

vehicles, the SSID and password can be changed in the Wi-Fi Hotspot menu.

After initial set-up, your vehicle's Wi-Fi hotspot will connect automatically to your mobile devices. Manage data usage by turning Wi-Fi on or off on your mobile device, using the myChevrolet mobile app, or by contacting an OnStar Advisor. On some vehicles, Wi-Fi can also be managed from the Wi-Fi Hotspot menu.

MyChevrolet Mobile App (If Available)

Download the myChevrolet mobile app to compatible Apple and Android smartphones. Chevrolet users can access the following services from a smartphone:

- Remotely start/stop the vehicle, if factory-equipped.
- Lock/unlock doors, if equipped with automatic locks.
- Activate the horn and lamps.
- Check the vehicle's fuel level, oil life, or tire pressure, if factory-equipped with the Tire Pressure Monitor System.
- Send destinations to the vehicle.
- Locate the vehicle on a map (U.S. market only).
- Turn the vehicle's Wi-Fi hotspot on/off, manage settings, and monitor data consumption, if equipped.
- Locate a dealer and schedule service.
- Request roadside assistance.
- Set a parking reminder with pin drop, take a photo, make a note, and set a timer.
- Connect with Chevrolet on social media.

Features are subject to change. For myChevrolet mobile app information and compatibility, see my.chevrolet.com.

An active OnStar or connected service plan may be required. A compatible device, factory-installed remote start, and power locks are required. Data rates apply. See www.onstar.com for details and system limitations.

Remote Services

Contact an OnStar Advisor to unlock the doors or sound the horn and flash the lamps.

Marketplace

OnStar Advisors can provide offers from restaurants and retailers on your route, help locate hotels, or book a room. These services vary by market.

Diagnostics

By monitoring and reporting on the vehicle's key systems, OnStar Advanced Diagnostics, if equipped, provides a way to keep up on maintenance. Capabilities vary by model. See www.onstar.com for details and system limitations. Features are subject to change. For updates on feature capabilities, see mychevrolet.com. Message and data rates may apply.

Index

A

Accessories and Modifications 221
Accessory Power 179
Active Fuel Management 181
Active Rev Match 190
Add-On Electrical Equipment . . . 218
Additional Information
  OnStar 340
Additional Maintenance and Care 312
Air Cleaner/Filter, Engine 235
Air Conditioning 143, 146
Air Filter
  Life System 234
Air Filter, Passenger Compartment 150
Air Vents 150
Airbag System
  Check 69
  How Does an Airbag Restrain? 62
  Passenger Sensing System 64
  What Makes an Airbag Inflate? 62
  What Will You See after an Airbag Inflates? 62
Airbag System (cont'd)
  When Should an Airbag Inflate? 60
  Where Are the Airbags? 59
Airbags
  Adding Equipment to the Vehicle 68
  Passenger Status Indicator . . . 108
  Readiness Light 108
  Servicing Airbag-Equipped Vehicles 68
  System Check 57
Alarm
  Vehicle Security 24
Alert
  Lane Change 211
  Side Blind Zone (SBZA) 210
All-Season Tires 260
Antilock Brake System (ABS) . . . 191
  Warning Light 113
Appearance Care
  Exterior 294
  Interior 300
Assistance Program, Roadside 328
Assistance Systems for Parking and Backing 206

Automatic
Climate Control System 143
Dimming Mirrors 27
Door Locks 21
Headlamp System 131
Transmission 183
Transmission Fluid 233
Automatic Transmission
Manual Mode 186
Shift Lock Control Function Check 247
Axle, Rear 246

B

Battery
Exterior Lighting Battery Saver 135
Load Management 135
Power Protection 135
Battery - North America 246, 289
Blade Replacement, Wiper 248
Boost Gauge 104
Brake
Parking, Electric 192
System Warning Light 112
Brakes 243
Antilock 191
Assist 193
Brakes (cont'd)
Fluid 244
Braking 155
Break-In, New Vehicle 174
Bulb Replacement
Back-up Lamps 251
Halogen Bulbs 251
Headlamp Aiming 250
Headlamps 251
High Intensity Discharge (HID) Lighting 251
License Plate Lamps 252
Buying New Tires 276

C

Calibration 94
California
Perchlorate Materials Requirements 221
California Proposition 65 Warning .....220, 246, 289, Back Cover
Canadian Vehicle Owners 2
Capacities and Specifications 320
Carbon Monoxide
Engine Exhaust 182
Carbon Monoxide (cont'd)
Trunk 22
Winter Driving 168
Caution, Danger, and Warning 2
Center Console Storage 90
Chains, Tire 281
Charging
Wireless 95
Charging System Light 109
Check
Engine Light (Malfunction Indicator) 110
Child Restraints
Infants and Young Children 72
Lower Anchors and Tethers for Children 77
Older Children 70
Securing 83, 85
Systems 74
Circuit Breakers 253
Cleaning
Exterior Care 294
Interior Care 300
Climate Control Systems
Automatic 143
Dual Automatic 146
Clock 94
Cluster, Instrument 98

Clutch, Hydraulic 234
Collision Damage Repair 331
Compartments
Storage 89
Compass 94
Competitive Driving Mode 200
Compressor Kit, Tire Sealant . . . 282
Connected Services
Connections 347
Diagnostics 348
Navigation 346
Connections
Connected Services 347
Control
Traction and Electronic
Stability 194
Control of a Vehicle 155
Convenience Net 90
Convertible Top 35
Convex Mirrors 26
Coolant
Engine Temperature Gauge . . 106
Cooling 143, 146
Cooling System 237
Courtesy Transportation
Program 330
Cruise Control 202
Light 116
Customer Assistance 327
Offices 326
Text Telephone (TTY)
Users 327
Customer Information
Publications Ordering
Information 333
Customer Satisfaction
Procedure 324
Cybersecurity 336

D

Damage Repair, Collision 331
Danger, Warning, and Caution 2
Data Collection
Infotainment System 337
OnStar 337
Data Recorder
Performance 137
Data Recorders, Event 336
Daytime Running
Lamps (DRL) 131
Defensive Driving 154
Delayed Locking 20
Diagnostics
Connected Services 348
Distracted Driving 153
Door
Ajar Light 116
Delayed Locking 20
Locks 18
Power Locks 20
Drive Belt Routing, Engine 323
Driver Assistance Systems 205
Driver Information
Center (DIC) 117
Driver Mode Control 196
Driving
Better Fuel Economy 153
Competitive 200
Defensive 154
Drunk 154
Hill and Mountain Roads 167
If the Vehicle is Stuck 169
Loss of Control 156
Off-Road Recovery 156
Track Events and
Competitive 157
Vehicle Load Limits 170
Wet Roads 167
Winter 168
Dual Automatic Climate
Control System 146

E

Electric Parking Brake 192
Electric Parking Brake Light 112
Electrical Equipment,
  Add-On 218
Electrical System
  Engine Compartment Fuse
    Block 253
  Fuses and Circuit Breakers ... 253
  Overload 252
  Rear Compartment Fuse
    Block 257
Emergency
  OnStar 339
Engine
  Air Cleaner/Filter 235
  Check Light (Malfunction
    Indicator) 110
  Compartment Overview 224
  Coolant Temperature
    Gauge 106
  Cooling System 237
  Drive Belt Routing 323
  Exhaust 182
  Heater 178
  Oil Life System 232
  Oil Pressure Gauge 105
  Oil Pressure Light 115
Engine (cont'd)
  Overheating 241
  Power Messages 124
  Running While Parked 183
  Starting 176
Engine Air Filter Life System 234
Entry Lighting 134
Event Data Recorders 336
Exit Lighting 134
Extended Parking 182
Extender, Seat Belt 55
Exterior Lamp Controls 130
Exterior Lighting Battery
  Saver 135

F

Filter,
  Engine Air Cleaner 235
Flash-to-Pass 131
Flashers, Hazard Warning 132
Flat Tire 281
Floor Mats 303
Fluid
  Automatic Transmission 233
  Brakes 244
  Washer 243
Forward Collision Alert
  (FCA) System 208
Frequency Statement
  Radio 334
Front Seats
  Adjustment 43
  Heated and Ventilated 48
Fuel
  Additives 215
  Economy, Driving for Better ... 153
  Filling a Portable Fuel
    Container 217
  Filling the Tank 215
  Foreign Countries 214
  Gauge 103
  Low Fuel Warning Light 115
  Management, Active 181
  Prohibited Fuels 214
  Recommended 213, 214
  Top Tier 213
Fuses
  Engine Compartment Fuse
    Block 253
  Fuses and Circuit Breakers ... 253
  Rear Compartment Fuse
    Block 257

G

Gas Strut(s) 249

Gauges
Boost 104
Engine Coolant
Temperature 106
Engine Oil Pressure 105
Fuel 103
Odometer 102
Speedometer 102
Tachometer 102
Trip Odometer 102
Voltmeter 107
Warning Lights and
Indicators 97
General Information
Service and Maintenance 304
Towing 217
Vehicle Care 220
Glove Box 89
GM Mobility Reimbursement
Program 328

H

Halogen Bulbs 251
Hazard Warning Flashers 132
Head Restraints 42
Head-up Display 120
Headlamps
Aiming 250
Headlamps (cont'd)
Automatic 131
Bulb Replacement 251
Daytime Running
Lamps (DRL) 131
Flash-to-Pass 131
High Intensity Discharge
(HID) Lighting 251
High-Beam On Light 116
High/Low Beam Changer 130
Lamps On Reminder 116
Heated
Steering Wheel 92
Heated and Ventilated Front
Seats 48
Heated Mirrors 27
Heater
Engine 178
Heating 143, 146
High-Beam On Light 116
High-Speed Operation 268
Hill and Mountain Roads 167
Hill Start Assist (HSA) 194
Hood 222
Horn 92
How to Wear Seat Belts
Properly 51
HVAC 143, 146
Hydraulic Clutch 234

I

Ignition Positions 175
Immobilizer 25
Indicator
Vehicle Ahead 113
Infants and Young Children,
Restraints 72
Information
Publication Ordering 333
Infotainment 137
Infotainment System 337
Instrument Cluster 98
Instrument Panel Overview 5
Interior Lamps 134
Interior Rearview Mirrors 28
Introduction 2

J

Jump Starting - North
America 289

K

Keyless Entry
Remote (RKE) System 8
Keys 7

L

Labeling, Tire Sidewall 263

Lamps
Daytime Running (DRL) 131
Exterior Controls 130
Exterior Lighting Battery Saver 135
Interior 134
License Plate 252
Malfunction Indicator (Check Engine) 110
On Reminder 116
Reading 134
Lane Change Alert (LCA) 211
Lap-Shoulder Belt 53
LATCH System
Replacing Parts after a Crash 83
LATCH, Lower Anchors and Tethers for Children 77
Latches, Seatback 47
LED Lighting 251
Lighting
Entry 134
Exit 134
Illumination Control 133
LED 251
Theater Dimming 135
Lights
Airbag Readiness 108
Lights (cont'd)
Antilock Brake System (ABS) Warning 113
Brake System Warning 112
Charging System 109
Check Engine (Malfunction Indicator) 110
Cruise Control 116
Door Ajar 116
Electric Parking Brake 112
Engine Oil Pressure 115
Flash-to-Pass 131
High-Beam On 116
High/Low Beam Changer 130
Low Fuel Warning 115
Seat Belt Reminders 107
Security 116
Service Electric Parking Brake 113
StabiliTrak OFF 114
Tire Pressure 115
Traction Control System (TCS)/StabiliTrak 114
Traction Off 114
Limited-Slip Rear Axle 202
Locks
Automatic Door 21
Delayed Locking 20
Locks (cont'd)
Door 18
Lockout Protection 21
Power Door 20
Loss of Control 156
Low Fuel Warning Light 115
Low-Profile Tires 262
Lower Anchors and Tethers for Children (LATCH System) 77

M

Maintenance
Records 318
Maintenance and Care
Additional 312
Maintenance Schedule 306
Recommended Fluids and Lubricants 315
Malfunction Indicator Lamp 110
Manual Mode 186
Manual Transmission 188
Fluid 234
Matching
Active Rev 190
Memory Seats 44
Messages
Engine Power 124

Messages (cont'd)
Vehicle 124
Vehicle Speed 124
Mirror
Rear Camera 28
Mirrors
Automatic Dimming 27
Automatic Dimming
Rearview 28
Convex 26
Heated 27
Manual Rearview 28
Power 27
Tilt in Reverse 27
Mirrors, Interior Rearview 28
Mode 196
Driver Control 196
Monitor System, Tire
Pressure 269

N

Navigation
Connected Services 346
Net, Convenience 90
New Vehicle Break-In 174

O

Odometer 102
Trip 102
Off-Road
Recovery 156
Oil
Engine 229
Engine Oil Life System 232
Engine Oil Pressure Gauge . . . 105
Pressure Light 115
Older Children, Restraints 70
Online Owner Center 327
OnStar 337
OnStar Additional
Information 340
OnStar Emergency 339
OnStar Overview 338
OnStar Security 340
Outlets
Power 94
Overheating, Engine 241
Overview
Instrument Panel 5

P

Park
Shifting Out of 180
Park Assist 206
Parking 181
Brake and P (Park)
Mechanism Check 247
Parking (cont'd)
Extended 182
Over Things That Burn 181
Parking or Backing
Assistance Systems 206
Passenger Airbag Status
Indicator 108
Passenger Compartment Air
Filter 150
Passenger Sensing System 64
Perchlorate Materials
Requirements, California 221
Performance Data
Recorder (PDR) 137
Personalization
Vehicle 125
Power
Door Locks 20
Mirrors 27
Outlets 94
Protection, Battery 135
Retained Accessory (RAP) . . . 179
Seat Adjustment 43
Windows 31
Pregnancy, Using Seat Belts 55
Privacy
Vehicle Data Recording 336

Program
Courtesy Transportation 330
Prohibited Fuels 214
Proposition
65 Warning,
California ..... 220, 246, 289, Back Cover
Publication Ordering
Information 333

R

Radio Frequency Statement 334
Reading Lamps 134
Rear Axle 246
Limited-Slip 202
Rear Camera Mirror 28
Rear Seats 49
Rear Storage 89
Rear Vision Camera (RVC) 206
Rearview Mirrors 28
Automatic Dimming 28
Reclining Seatbacks 44
Recommended
Fuel 213, 214
Recommended Fluids and
Lubricants 315
Records
Maintenance 318
Recreational Vehicle Towing 294
Reimbursement Program,
GM Mobility 328
Remote Keyless Entry (RKE)
System 8
Remote Vehicle Start 16
Replacement Parts
Airbags 70
Maintenance 317
Replacing Airbag System 70
Replacing LATCH System
Parts after a Crash 83
Replacing Seat Belt System
Parts after a Crash 56
Reporting Safety Defects
Canadian Government 335
General Motors 335
U.S. Government 334
Restraints
Where to Put 76
Retained Accessory
Power (RAP) 179
Reverse Tilt Mirrors 27
Ride Control Systems
Limited Slip Rear Axle 202
Roads
Driving, Wet 167
Roadside Assistance
Program 328
Roof
Sunroof 34
Rotation, Tires 274
Routing, Engine Drive Belt 323
Run-Flat Tires 261
Running the Vehicle While
Parked 183

S

Safety Defects Reporting
Canadian Government 335
General Motors 335
U.S. Government 334
Safety System Check 56
Scheduling Appointments 330
Sealant Kit, Tire 282
Seat Belts 50
Care 56
Extender 55
How to Wear Seat Belts
Properly 51
Lap-Shoulder Belt 53
Reminders 107
Replacing after a Crash 56
Use During Pregnancy 55
Seatback Latches 47

Seats
Adjustment, Front 43
Head Restraints 42
Heated and Ventilated Front 48
Memory 44
Power Adjustment, Front 43
Rear 49
Reclining Seatbacks 44
Securing Child Restraints 83, 85
Security
Light 116
OnStar 340
Vehicle 24
Vehicle Alarm 24
Service 150
Accessories and
Modifications 221
Doing Your Own Work 221
Maintenance Records 318
Maintenance, General
Information 304
Parts Identification 319
Scheduling Appointments 330
Service Electric Parking
Brake Light 113
Services
Special Application 312
Servicing the Airbag 68
Shift Lock Control Function
Check, Automatic
Transmission 247
Shifting
Into Park 180
Out of Park 180
Side Blind Zone Alert (SBZA) . . . 210
Signals, Turn and
Lane-Change 133
Special Application Services 312
Specifications and
Capacities 320
Speedometer 102
StabiliTrak
OFF Light 114
Start Assist, Hill 194
Start Vehicle, Remote 16
Starter Switch Check 247
Starting the Engine 176
Steering 155
Heated Wheel 92
Wheel Adjustment 92
Wheel Controls 92
Storage
Rear 89
Storage Areas
Center Console 90
Convenience Net 90
Storage Areas (cont'd)
Glove Box 89
Storage Compartments 89
Storing the Tire Sealant and
Compressor Kit 289
Struts
Gas 249
Stuck Vehicle 169
Summer Tires 262
Sun Visors 33
Sunroof 34
Symbols 3
System
Engine Air Filter Life 234
Forward Collision
Alert (FCA) 208
Infotainment 137, 337
Systems
Driver Assistance 205

T

Tachometer 102
Text Telephone (TTY) Users 327
Theater Dimming 135
Theft-Deterrent Systems 25
Immobilizer 25
Time 94
Tires 259

Tires (cont'd)
All-Season 260
Buying New Tires 276
Chains 281
Designations 264
Different Size 278
If a Tire Goes Flat 281
Inspection 274
Low Profile 262
Pressure 267, 268
Pressure Light 115
Pressure Monitor Operation . . 270
Pressure Monitor System 269
Rotation 274
Run-Flat 261
Sealant and
Compressor Kit 282
Sealant and Compressor
Kit, Storing 289
Sidewall Labeling 263
Terminology and Definitions . . 265
Uniform Tire Quality
Grading 278
Wheel Alignment and Tire
Balance 280
Wheel Replacement 280
When It Is Time for New
Tires 275
Tires (cont'd)
Winter 261
Top Tier Fuel 213
Towing
General Information 217
Recreational Vehicle 294
Vehicle 292
Track Events and
Competitive Driving 157
Traction
Control System
(TCS)/StabiliTrak Light 114
Limited-Slip Rear Axle 202
Off Light 114
Traction Control/Electronic
Stability Control 194
Transmission
Automatic 183
Fluid, Automatic 233
Fluid, Manual 234
Transportation Program,
Courtesy 330
Trip Odometer 102
Trunk 22
Turn and Lane-Change
Signals 133

U

Uniform Tire Quality Grading . . .278
Using This Manual 2

V

Vehicle
Alarm System 24
Canadian Owners 2
Control 155
Identification Number (VIN) . . . 319
Load Limits 170
Messages 124
Personalization 125
Remote Start 16
Security 24
Speed Messages 124
Towing 292
Vehicle Ahead Indicator 113
Vehicle Care
Storing the Tire Sealant
and Compressor Kit 289
Tire Pressure 267
Vehicle Data Recording and
Privacy 336
Ventilation, Air 150
Visors 33
Voltmeter Gauge 107

W

Warning
Brake System Light 112
Caution and Danger 2
Warning Lights, Gauges, and Indicators 97
Warnings
Hazard Flashers 132
Washer Fluid 243
Wheels
Alignment and Tire Balance .. 280
Different Size 278
Replacement 280
When It Is Time for New Tires 275
Where to Put the Restraint 76
Windows 31
Power 31
Windshield
Replacement 249
Wiper/Washer 92
Winter
Driving 168
Winter Tires 261
Wiper Blade Replacement 248
Wireless Charging 95

WARNING

Operating, servicing and maintaining a passenger vehicle or off-highway motor vehicle can expose you to chemicals including engine exhaust, carbon monoxide, phthalates, and lead, which are known to the State of California to cause cancer and birth defects or other reproductive harm. To minimize exposure, avoid breathing exhaust, do not idle engine except as necessary, service your vehicle in a well-ventilated area and wear gloves or wash your hands frequently when servicing your vehicle. For more information go to www.P65Warnings.ca.gov/passenger-vehicle.

Certified Service

84295534 C